CITY OF ANNA, TEXAS

ORDINANCE NO. 730-2016

AN ORDINANCE OF THE CITY OF ANNA, TEXAS, ADOPTING THE 2015 EDITION OF THE INTERNATIONAL BUILDING CODE, 2015 EDITION OF THE INTERNATIONAL RESIDENTIAL CODE, 2015 EDITION OF THE INTERNATIONAL ENERGY CONSERVATION CODE, 2015 EDITION OF THE INTERNATIONAL FIRE CODE, 2015 EDITION OF THE INTERNATIONAL FUEL GAS CODE, 2015 EDITION OF THE INTERNATIONAL MECHANICAL CODE, 2015 EDITION OF THE INTERNATIONAL PLUMBING CODE, 2014 EDITION OF THE NATIONAL ELECTRICAL CODE; ADOPTING THE NORTH CENTRAL TEXAS COUNCIL OF GOVERNMENTS RECOMMENDED AMENDMENTS TO SAID ADOPTED CODES; PROVIDING FOR A PENALTY FOR ANY VIOLATION OF THIS ORDINANCE NOT TO EXCEED $2,000; PROVIDING FOR SAVINGS, SEVERABILITY, AND REPEALING CLAUSES; PROVIDING FOR AN EFFECTIVE DATE; AND PROVIDING FOR THE PUBLICATION OF THE CAPTION HEREOF.

WHEREAS, the State of Texas ("State") has mandated that the International Codes published by the International Code Council (ICC) or comparable regulations are to be used by local governments that regulate building construction; and

WHEREAS, the ICC model codes are reviewed and updated periodically to respond to changes in technology and construction standards; and

WHEREAS, the State has mandated the energy conservation chapter of the 2015 International Residential Code, as the energy code for all single-family residential construction effective September 1, 2016; and

WHERAS, the State has mandated the 2015 International Energy Code as the energy code for all other residential, commercial, and industrial construction effective November 1, 2016; and

WHEREAS, many cities in the North Central Texas area have adopted or are considering adopting the more recent versions of the ICC International Codes and the National Electric Code; and

WHEREAS, in order to appropriately respond to changes in technology, construction standards and State law, the City Council finds that it is in the City's best interest to adopt the 2015 versions of the ICC International Codes, the 2014 National Electric Code and the Recommended Amendments recommended by the North Central Texas Council of Governments; and

WHEREAS, the ICC International Codes and the National Electric Code are designed for adoption by state or local governments by reference; and

WHEREAS, based on firefighting philosophies / capabilities OPTION "A" and OPTION "B" are provided in the Fire and Building Code amendments, and the City chooses OPTION "B" based on its firefighting philosophies / capabilities;

NOW, THEREFORE, BE IT ORDAINED BY THE CITY COUNCIL OF THE CITY OF ANNA, TEXAS, THAT:

Section 1. Recitals Incorporated.

The above-referenced recitals are incorporated herein as if set forth in full for all purposes.

Section 2. International Building Code Adopted.

The City Council hereby adopts the 2015 Edition of the International Building Code, including Appendix C and E, but not including Appendix A, B, D, F, G, H, I, J, and K, replacing the 2009 Edition of the International Building Code, adopted by Ordinance No. 661-2014.

Section 3. International Residential Code.

The City Council hereby adopts the 2015 Edition of the International Residential Code, replacing the 2009 Edition of the International Residential Code, adopted by Ordinance No. 661-2014.

Section 4. National Electrical Code Adopted.

The City Council hereby adopts the 2014 Edition of the International Electrical Code, replacing the 2006 Edition of the National Electrical Code, adopted by Ordinance No. 661-2014.

Section 5. International Energy Conservation Code Adopted.

The City Council hereby adopts the 2015 Edition of the International Energy Conservation Code, replacing the 2009 Edition of the International Energy Conservation Code, adopted by Ordinance No. 661-2014.

Section 6. International Fire Code Adopted.

The City Council hereby adopts the 2015 Edition of the International Fire Code, including Appendix B-J, but not including Appendix A, replacing the 2009 Edition of the International Fire Code, adopted by Ordinance No. 661-2014.

Section 7. International Fuel Gas Code Adopted.

The City Council hereby adopts the 2015 Edition of the International Fuel Gas Code including Appendix A through C, but not including Appendix D, replacing the 2009 Edition of the International Fuel Gas Code, adopted by Ordinance No. 661-2014.

Section 8. International Mechanical Code Adopted.

The City Council hereby adopts the 2015 Edition of the International Mechanical Code including Appendix A, but not including Appendix B, replacing the 2009 Edition of the International Mechanical Code, adopted by Ordinance No. 661-2014.

Section 9. International Plumbing Code Adopted.

The City Council hereby adopts the 2015 Edition of the International Plumbing Code including Appendix E through G, but not including Appendix A through D, replacing the 2009 Edition of the International Plumbing Code, adopted by Ordinance No. 661-2014.

Section 10. Amendments.

The City Council hereby further adopts the North Central Texas Council of Governments Recommended Amendments to the International Building Code, International Residential Code, International Electrical Code, International Energy Conservation Code, International Fire Code (Option B), International Fuel Gas Code, International Mechanical Code, and International Plumbing Code, which are attached to this ordinance as Exhibit A.

Section 11. Schedule of Fees.

The schedule of fees for various inspection and other services performed by the code enforcement official, as detailed in The Anna City Code of Ordinances, Part IV, Schedule of Fees, shall be paid to the City before any permit is issued.

Section 12. Supplementation of Code of Ordinances.

In accordance with Part II, Article 1, Section 10 of The Anna City Code of Ordinances (the "Anna Code"), a supplementation to the Anna Code is approved by the City Council and is authorized to be performed by the City Manager, City Secretary, and City Attorney, to include all substantive permanent and general parts of ordinances amending the Anna Code, that have been adopted as of October 25, 2016 by the City Council. Said supplement shall include all amendments, changes, supplementations, deletions and any other modifications made by the City Council to the Anna Code, all as currently amended, including without limitation revisions to Part II, Article 8, as necessary to specify the newly applicable uniform building codes, as amended and adopted under this ordinance. The City Council further hereby approves and ratifies all past supplements to any part of the printed Anna Code.

Section 13. Conflicts with Personnel Regulations.

To the extent that any of the regulations or provisions adopted under Sections 2-11 of this ordinance directly or indirectly conflict with the City's Personnel Policy Manual or any other personnel polices applicable to the City (collectively, "City Personnel Regulations"), the City Personnel Regulations shall govern. To the extent that any of the regulations or provisions adopted under Sections 2-11 of this ordinance afford any rights, privileges, protections, or benefits of any kind in excess of or in addition to those provided to City personnel under City Personnel Regulations, such excess or additional rights, privileges, protections or benefits shall be deemed to have been deleted as part of the adoption of this Ordinance.

Section 14. Penalty.

Any violation of any of the terms of this ordinance, whether herein denominated as unlawful or not, shall be deemed a misdemeanor. Any person convicted of any such violation shall be fined in an amount not to exceed ($2,000.00) two thousand dollars for each incidence of violation. Each day of the continuance of such violation shall be considered a separate offense and be punished separately.

Section 15. Savings, Severability and Repealing Clauses.

All ordinances of the City in conflict with the provisions of this ordinance are repealed to the extent of that conflict. If any provision of this ordinance shall be held to be invalid or unconstitutional, the remainder of such ordinance shall continue in full force and effect the same as if such invalid or unconstitutional provision had never been a part hereof. The City declares that it would have passed this ordinance, and each section, subsection, clause, or phrase thereof irrespective of the fact that any one or more sections, subsections, sentences, clauses, and phrases be declared unconstitutional or invalid.

Section 16. Publication of the Caption Hereof and Effective Date.

This ordinance shall be in full force and effective from and after its passage and upon the posting and/or publication, if required by law, of its caption and the City Secretary is hereby directed to implement such posting and/or publication.

PASSED by the City Council of the City of Anna, Texas, this 11th day of October 2016.

ATTESTED: APPROVED:

Carrie L. Smith

City Secretary Carrie L. Smith Mayor Mike Crist

CITY OF ANNA TEXAS

Exhibits

EXHIBIT A

Recommended Amendments to the 2015 International Building Code

North Central Texas Council of Governments Region

The following sections, paragraphs, and sentences of the *2015 International Building Code* are hereby amended as follows: Standard type is text from the IBC. Underlined type is text inserted. ~~Lined through type is deleted text from IBC.~~ A double asterisk (**) at the beginning of a section identifies an amendment carried over from the 2012 edition of the code and a triple asterisk (***) identifies a new or revised amendment with the 2015 code.

Explanation of Options A and B:
Please note that as there is a wide range in fire fighting philosophies / capabilities of cities across the region, OPTION "A" and OPTION "B" are provided in the Fire and Building Code amendments. Jurisdictions should choose one or the other based on their fire fighting philosophies / capabilities when adopting code amendments.

*****Section 101.4; change to read as follows:***

101.4 Referenced codes. The other codes listed in Sections 101.4.1 through 101.4.8 and referenced elsewhere in this code, when specifically adopted, shall be considered part of the requirements of this code to the prescribed extent of each such reference. Whenever amendments have been adopted to the referenced codes and standards, each reference to said code and standard shall be considered to reference the amendments as well. Any reference to NFPA 70 or the Electrical Code shall mean the Electrical Code as adopted.

(Reason: Legal wording to recognize locally adopted codes and amendments adopted with referenced codes. The former ICC Electrical Code is now Appendix K of this code but no longer called by that name.)

*****Section 101.4.8; add the following:***

101.4.8 Electrical. The provisions of the Electrical Code shall apply to the installation of electrical systems, including alterations, repairs, replacement, equipment, appliances, fixtures, fittings and appurtenances thereto.

(Reason: This was dropped when ICC quit publishing the ICC Electrical Code, but the Electrical Code still should be referenced regardless of how it is adopted.)

***** Section 103 and 103.1 amend to insert the Department Name***

~~DEPARTMENT OF BUILDING SAFETY~~ [PLANNING AND DEVELOPMENT]

103.1 Creation of enforcement agency. The ~~Department of Building Safety~~ [INSERT OFFICIAL BUILDING DEPARTMENT NAME OF JURISDICTION] is hereby created and the official in charge thereof shall be known as the *building official*.

(Reason: Reminder to be sure ordinance reads the same as designated by the city.)

*****Section [A] 104.2.1 Determination of substantially improved or substantially damaged existing buildings and structures in flood hazard areas*;*** *(jurisdictions may consider the option **to amend or delete** depending on local enforcement and flood hazard ordinances.)*

*****Section 104.10.1; Flood hazard areas.*** *(jurisdictions may consider the option **to amend or delete***

depending on local enforcement and flood hazard ordinances.)

(Reason: Flood hazard ordinances may be administered by other departments within the city.)

*****Section 105.2 Work exempt from permit; under sub-title entitled "Building" delete items 1, 2, 10 and 11 and re-number as follows:***

Building:

~~1. One-story detached accessory structures used as tool and storage sheds, playhouses and similar uses, provided the floor area does not exceed 120 square feet (11 m_2).~~

~~2. Fences not over 7 feet (1829 mm) high.~~

~~3.~~ 1. (Unchanged)

~~4.~~ 2. (Unchanged)

~~5.~~ 3. (Unchanged)

~~6.~~ 4. (Unchanged)

~~7.~~ 5. (Unchanged)

~~8.~~ 6. (Unchanged)

~~9.~~ 7. (Unchanged)

~~10. Shade cloth structures constructed for nursery or agricultural purposes, not including service systems.~~

~~11.~~ 8. (Unchanged)

~~12.~~ 9. (Unchanged)
~~13.~~ 10. (Unchanged)

(Reason: Item~~s~~ deleted are for one- and two-family dwellings regulated by the International Residential Code. Accessory structures, fences and shade cloth structures would require a permit for commercial properties to ensure compliance with local ordinance, egress, accessibility, flame spread of fabric, wind/snow design load, etc.).

*****Section 109; add Section 109.7 to read as follows:***

109.7 Re-inspection Fee. A fee as established by city council resolution may be charged when:

1. The inspection called for is not ready when the inspector arrives;

2. No building address or permit card is clearly posted;

3. City approved plans are not on the job site available to the inspector;

4. The building is locked or work otherwise not available for inspection when called;

5. The job site is red-tagged twice for the same item;

6. The original red tag has been removed from the job site.

7. Failure to maintain erosion control, trash control or tree protection.

Any re-inspection fees assessed shall be paid before any more inspections are made on that job site.

(Reason: This fee is not a fine or penalty but is designed to compensate for time and trips when inspections are called for when not ready.)

Section 109; add Section 109.8, 109.8.1, 109.8.2 and 109.9 to read as follows:

109.8 Work without a permit.

109.8.1 Investigation. Whenever work for which a permit is required by this code has been commenced without first obtaining a permit, a special investigation shall be made before a permit may be issued for such work.

109.8.2 Fee. An investigation fee, in addition to the permit fee, shall be collected whether or not a permit is subsequently issued. The investigation fee shall be equal to the amount of the permit fee required by this code or the city fee schedule as applicable. The payment of such investigation fee shall not exempt the applicant from compliance with all other provisions of either this code or the technical codes nor from penalty prescribed by law.

109.9 Unauthorized cover up fee. Any work concealed without first obtaining the required inspection in violation of Section 110 shall be assessed a fee as established by the city fee schedule.

(Reason: This fee is not a fine or penalty but is designed to compensate for time and to remove incentive to attempt to evade permits and code compliance. Text taken from former Uniform Administrative Code.)

Section 110.3.5; Lath, gypsum board and gypsum panel product inspection. Delete exception

~~***Exception :*** *Gypsum board and gypsum panel products that are not part of a fire resistance rated assembly or a shear assembly.*~~

(Reason: Lath or gypsum board inspections are performed in this area.)

Section 202; amend definition of Ambulatory Care Facility as follows:

AMBULATORY CARE FACILITY. Buildings or portions thereof used to provide medical, surgical, psychiatric, nursing or similar care on a less than 24-hour basis to individuals who are rendered incapable of self-preservation by the services provided. This group may include but not be limited to the following:

- Dialysis centers
- Sedation dentistry
- Surgery centers
- Colonic centers
- Psychiatric centers

*(Reason: To clarify the range of uses included in the definition. [Explanatory note related to **Ambulatory Care Facilities**: This group of uses includes medical or dental offices where persons are put under for dental surgery or other services. Section 903.2.2 will now require such uses to be sprinklered if on other than the floor of exit discharge or if four or more persons are put under on the level of exit discharge. Recommend (1.) jurisdictions document any pre-existing non-conforming conditions prior to issuing a new C of O for a change of tenant and, (2.) On any medical or dental office specify on C of O the maximum number of persons permitted to be put under general anesthesia.*
It is recommended that before a Certificate of Occupancy is issued, a letter of intended use from the business owner shall be included and a C of O documenting the maximum number of care recipients incapable of self preservation allowed.)

Section 202; add definition of Assisting Living Facilities to read as follows.

ASSISTED LIVING FACILITIES. *A building or part thereof housing persons, on a 24-hour basis, who because of age, mental disability or other reasons, live in a supervised residential environment which provides personal care services. The occupants are capable of responding to an emergency situation without physical assistance from staff.*

(Reason: The code references Assisted Living facilities and definition was deleted)

Section 202; change definition of "Atrium" as follows:

ATRIUM. An opening connecting ~~two~~ three or more stories… *{Balance remains unchanged}*

(Reason: Accepted practice in the region based on legacy codes. Section 1019 permits unenclosed two story stairways under certain circumstances.)

*****Section 202; add definition of "Repair Garage" as follows:***

REPAIR GARAGE. A building, structure or portion thereof used for servicing or repairing motor vehicles. This occupancy shall also include garages involved in minor repair, modification and servicing of motor vehicles for items such as lube changes, inspections, windshield repair or replacement, shocks, minor part replacement and other such minor repairs.

(Reason: The code references aligns with fire code)

******Section 202; amend definition of SPECIAL INSPECTOR to read as follows:***

SPECIAL INSPECTOR. A qualified person employed or retained by an approved agency who shall prove to the satisfaction of the registered design professional in responsible charge and ~~approved by~~ the Building Official as having the competence necessary to inspect a particular type of construction requiring special inspection.

(Reason: The registered design professional in responsible charge should be included.)

Option A

*****Section 202;*** *{No amendment necessary}*

Option B

*****Section 202; amend definition to read as follows:***

HIGH-RISE BUILDING. A building with an occupied floor located more than ~~75~~ 55 feet ~~(22 860 mm)~~ (16 764 mm) above the lowest level of fire department vehicle access.

(Reason: To define high-rise, as it influences sprinkler requirement thresholds based on the fire fighting capabilities of a jurisdiction.)

*****Section 303.1.3; add a sentence to read as follows:***

303.1.3 Associated with Group E occupancies. A room or space used for assembly purposes that is associated with a Group E occupancy is not considered a separate occupancy. Except when applying the assembly requirements of Chapter 10 and 11.

(Reason: To clarify that egress and accessibility requirements are applicable for assembly areas, i.e. cafeteria, auditoriums, etc.)

*****Section 304.1; add the following to the list of occupancies:***

Fire stations
Police stations with detention facilities for 5 or less

(Reason: Consistent with regional practice dating back to the legacy codes.)

*****Section 307.1.1; add the following sentence to Exception 4:***

4. Cleaning establishments… *{Text unchanged}* …with Section 707 or 1-hour horizontal assemblies constructed in accordance with Section 711 or both. See also IFC Chapter 21, Dry Cleaning Plant

provisions.
(Reason: To call attention to detailed requirements in the Fire Code.)

*****Section 403.1, Exception 3; change to read as follows:***

3. The open air portion of a building *[remainder unchanged]*

(Reason: To clarify enclosed portions are not exempt.)

*****Section 403.3, Exception; delete item 2.***

(Reason: To provide adequate fire protection to enclosed areas.)

******Section 403.3.2; change to read as follows:***

[F] 403.3.2 Water supply to required fire pumps. In buildings that are more than ~~420~~ 120 feet (36.5 m) in building height, required fire pumps shall be supplied by connections to no fewer than two water mains located in different streets. Separate supply piping shall be provided between each connection to the water main and the pumps. Each connection and the supply piping between the connection and the pumps shall be sized to supply the flow and pressure required for the pumps to operate.

Exception: {No change to exception.}

(Reason: The 2009 edition of the IFC added this requirement based on a need for redundancy of the water supply similar to the redundancy of the power supply to the fire pumps required for such tall buildings, partially due to the fact that these buildings are rarely fully evacuated in a fire event. More commonly, the alarm activates on the floor of the event, the floor above and the floor below. Back-up power to the fire pump becomes critical for this reason. Certainly, the power is pointless if the water supply is impaired for any reason, so a similar requirement is provided here for redundant water supplies. The 2015 edition changes the requirement to only apply to very tall buildings over 420 ft. This amendment modifies/lowers the requirement to 120 ft., based on this same height requirement for fire service access elevators. Again, the language from the 2009 and 2012 editions of the code applied to any high-rise building. This compromise at 120 ft. is based on the above technical justification of defend-in-place scenarios in fire incidents in such tall structures.)

*****Section 404.5; delete Exception.***

(Reason: Consistent with amended atrium definition.)

*****Section 406.3.5.1 Carport separation; add sentence to read as follows:***

A fire separation is not required between a Group R-2 and U carport provided that the carport is entirely open on all sides and that the distance between the two is at least 10 feet (3048 mm).

(Reason: Simplifies the fire separation distance and eliminates the need to obtain opening information on existing buildings when adding carports in existing apartment complexes. Consistent with legacy codes in effect in region for years and no record of problems with car fires spreading to apartments as a result.)

*****Section 506.2.2; add sentence to read as follows:***

506.3.2.1 Open Space Limits. Such open space shall be either on the same lot or dedicated for public use and shall be accessed from a street or approved fire lane. In order to be considered as accessible, if not in direct contact with a street or fire lane, a minimum 10-foot wide pathway meeting fire department access from the street or approved fire lane shall be provided.

(Reason: To define what is considered accessible. Consistent with regional amendment to IFC 504.1.)

Section 712.1.9, change item 4 to read as follows:

4. Is not open to a corridor in Group I and ~~R~~ H occupancies.

(Reason: To be consistent with amended definition of an atrium.)

Section 901.6.1; add Section 901.6.1.1 to read as follows:

901.6.1.1 Standpipe Testing. Building owners/managers must maintain and test standpipe systems as per NFPA 25 requirements. The following additional requirements shall be applied to the testing that is required every 5 years:

1. The piping between the Fire Department Connection (FDC) and the standpipe shall be backflushed when foreign material is present, and also hydrostatically tested for all FDC's on any type of standpipe system. Hydrostatic testing shall also be conducted in accordance with NFPA 25 requirements for the different types of standpipe systems.

2. For any manual (dry or wet) standpipe system not having an automatic water supply capable of flowing water through the standpipe, the tester shall connect hose from a fire hydrant or portable pumping system (as approved by the *fire code official*) to each FDC, and flow water through the standpipe system to the roof outlet to verify that each inlet connection functions properly. Confirm that there are no open hose valves prior to introducing water into a dry standpipe. There is no required pressure criteria at the outlet. Verify that check valves function properly and that there are no closed control valves on the system.

3. Any pressure relief, reducing, or control valves shall be tested in accordance with the requirements of NFPA 25. All hose valves shall be exercised.

4. If the FDC is not already provided with approved caps, the contractor shall install such caps for all FDC's as required by the *fire code official*.

5. Upon successful completion of standpipe test, place a blue tag (as per Texas Administrative Code, Fire Sprinkler Rules for Inspection, Test and Maintenance Service (ITM) Tag) at the bottom of each standpipe riser in the building. The tag shall be check-marked as "Fifth Year" for Type of ITM, and the note on the back of the tag shall read "5 Year Standpipe Test" at a minimum.

6. The procedures required by Texas Administrative Code Fire Sprinkler Rules with regard to Yellow Tags and Red Tags or any deficiencies noted during the testing, including the required notification of the local Authority Having Jurisdiction (*fire code official*) shall be followed.

7. Additionally, records of the testing shall be maintained by the owner and contractor, if applicable, as required by the State Rules mentioned above and NFPA 25.

8. Standpipe system tests where water will be flowed external to the building shall not be conducted during freezing conditions or during the day prior to expected night time freezing conditions.

9. Contact the *fire code official* for requests to remove existing fire hose from Class II and III standpipe systems where employees are not trained in the utilization of this firefighting equipment. All standpipe hose valves must remain in place and be provided with an approved cap and chain when approval is given to remove hose by the *fire code official*.

(Reason: Increases the reliability of the fire protection system and re-emphasizes the requirements of NFPA 25 relative to standpipe systems, as well as ensuring that FDC connections are similarly tested/maintained to ensure operation in an emergency incident.)

Section 903.1.1; change to read as follows:

[F] 903.1.1 Alternative protection. Alternative automatic fire-extinguishing systems complying with Section 904 shall be permitted ~~instead of~~ in addition to automatic sprinkler protection where recognized

by the applicable standard ~~and~~, or as *approved* by the *fire code official*.

(Reason: Such alternative systems do not provide the reliability of automatic sprinkler protection in general. An applicant could pursue an Alternate Method request to help mitigate the reliability issues with these alternative systems with the fire code official if so desired, or there may be circumstances in which the fire code official is acceptable to allowing an alternate system in lieu of sprinklers, such as kitchen hoods or paint booths. This also meets with local practices in the region.)

*****Section 903.2; add the following:***

[F] 903.2 Where required. *Approved automatic sprinkler systems* in new buildings and structures shall be provided in the locations described in Sections 903.2.1 through 903.2.12. Automatic Sprinklers shall not be installed in elevator machine rooms, elevator machine spaces, and elevator hoistways, other than pits where such sprinklers would not necessitate shunt trip requirements under any circumstances. Storage shall not be allowed within the elevator machine room. Signage shall be provided at the entry doors to the elevator machine room indicating "ELEVATOR MACHINERY – NO STORAGE ALLOWED."

(Reason: Firefighter and public safety. This amendment eliminates the shunt trip requirement of the International Building Code Section 3006.5 for the purpose of elevator passenger and firefighter safety. This amendment is contingent on the Building Code amendment eliminating the Exceptions to Section 3006.4, such that passive fire barriers for these areas are maintained. This also meets with local practices in the region.)

[F] *****Section 903.2; delete the exception.***

(Reason: The exception deletion is due to the fact that such telecom areas pose an undue fire risk to the structural integrity of the building. This also meets with local practices in the region.)

*****Section 903.2.9; add Section 903.2.9.3 to read as follows:***

[F] 903.2.9.3 Self-service storage facility. An automatic sprinkler system shall be installed throughout all self-service storage facilities.

(Reason: Fire departments are unable to inspect these commercial occupancies and are unaware of the contents being stored. Previous allowance to separate units by fire barriers is difficult to enforce maintenance after opening.)

Option A

Section 903.2.11; change 903.2.11.3 and add 903.2.11.7 and 903.2.11.8, as follows:

903.2.11.3 Buildings 55 feet or more in height. An automatic sprinkler system shall be installed throughout buildings that have one or more stories ~~with an occupant load of 30 or more~~, other than penthouses in compliance with Section 1510 of the *International Building Code*, located 55 feet (16 764 mm) or more above the lowest level of fire department vehicle access, measured to the finished floor.

Exceptions:

~~1.~~ Open parking structures in compliance with Section 406.5 of the *International Building Code, having no other occupancies above the subject garage.*

~~2. Occupancies in Group F-2.~~

903.2.11.7 High-Piled Combustible Storage. For any building with a clear height exceeding 12 feet (4572 mm), see Chapter 32 to determine if those provisions apply.

903.2.11.8 Spray Booths and Rooms. New and existing spray booths and spraying rooms shall be

protected by an approved automatic fire-extinguishing system.

Option B

Section 903.2.11; change 903.2.11.3 and add 903.2.11.7, 903.2.11.8, and 903.2.11.9 as follows:

903.2.11.3 Buildings ~~55~~ 35 feet or more in height. An automatic sprinkler system shall be installed throughout buildings that have one or more stories ~~with an occupant load of 30 or more~~, other than penthouses in compliance with Section 1510 of the *International Building Code*, located ~~55~~ 35 feet (~~16 764~~ 10 668 mm) or more above the lowest level of fire department vehicle access, measured to the finished floor.

Exceptions:

~~1.~~ Open parking structures in compliance with Section 406.5 of the *International Building Code, having no other occupancies above the subject garage*.

~~2. Occupancies in Group F-2.~~

903.2.11.7 High-Piled Combustible Storage. For any building with a clear height exceeding 12 feet (4572 mm), see Chapter 32 of the IFC to determine if those provisions apply.

903.2.11.8 Spray Booths and Rooms. New and existing spray booths and spraying rooms shall be protected by an approved automatic fire-extinguishing system.

903.2.11.9 Buildings Over 6,000 sq.ft. An automatic sprinkler system shall be installed throughout all buildings with a building area 6,000 sq.ft. or greater and in all existing buildings that are enlarged to be 6,000 sq. ft. or greater. For the purpose of this provision, fire walls shall not define separate buildings.

Exception: Open parking garages in compliance with Section 406.5 of the *International Building Code*.

(Reason: Provides jurisdictions options as to their desired level of sprinkler protection based on multiple factors including firefighting philosophies/capabilities.)

*****Section 903.3.1.1.1; change to read as follows:***

[F] 903.3.1.1.1 Exempt locations. When approved by the *fire code official*, automatic sprinklers shall not be required in the following rooms or areas where such *...{text unchanged}…* because it is damp, of fire-resistance-rated construction or contains electrical equipment.

1. Any room where the application of water, or flame and water, constitutes a serious life or fire hazard.
2. Any room or space where sprinklers are considered undesirable because of the nature of the contents, when approved by the code official.
3. Generator and transformer rooms, under the direct control of a public utility, separated from the remainder of the building by walls and floor/ceiling or roof/ceiling assemblies having a fire-resistance rating of not less than 2 hours.
4. ~~Rooms or areas that are of noncombustible construction with wholly noncombustible contents.~~
5. ~~Fire service access~~ Elevator machine rooms, ~~and~~ machinery spaces, and hoistways, other than pits where such sprinklers would not necessitate shunt trip requirements under any circumstances.
6. {Delete.}

(Reason: Gives more direction to code official. Exception 4 deleted to provide protection where fire risks are poorly addressed. Amendment 903.2 addresses Exception 5. above relative to the elimination of sprinkler protection in these areas to avoid the shunt trip requirement.)

*****Section 903.3.1.2.3; add section to read as follows:***

[F] Section 903.3.1.2.3 Attics and Attached Garages. Sprinkler protection is required in attic spaces of such buildings two or more stories in height, in accordance with NFPA 13 and or NFPA 13R requirements, and attached garages.

(Reason: Attic protection is required due to issues with fire exposure via soffit vents, as well as firefighter safety. Several jurisdictions indicated experience with un-protected attic fires resulting in displacement of all building occupants. NFPA 13 provides for applicable attic sprinkler protection requirements, as well as exemptions to such, based on noncombustible construction, etc. Attached garages already require sprinklers via NFPA 13R – this amendment just re-emphasizes the requirement.)

*****Section 903.3.1.3; change to read as follows:***

[F] 903.3.1.3 NFPA 13D sprinkler systems. *Automatic sprinkler systems* installed in one- and two-family *dwellings*; Group R-3; Group R-4 Condition 1 and *townhouses* shall be permitted to be installed throughout in accordance with NFPA 13D or in accordance with state law.

(Reason: To allow the use of the Plumbing section of the IRC and recognize current state stipulations in this regard.)

******Section 903.3.1.4; add to read as follows:***

[F] 903.3.1.4 Freeze protection. Freeze protection systems for automatic fire sprinkler systems shall be in accordance with the requirements of the applicable referenced NFPA standard and this section.

903.3.1.4.1 Attics. Only dry-pipe, preaction, or listed antifreeze automatic fire sprinkler systems shall be allowed to protect attic spaces.

Exception: Wet-pipe fire sprinkler systems shall be allowed to protect non-ventilated attic spaces where:

1. The attic sprinklers are supplied by a separate floor control valve assembly to allow ease of draining the attic system without impairing sprinklers throughout the rest of the building, and
2. Adequate heat shall be provided for freeze protection as per the applicable referenced NFPA standard, and
3. The attic space is a part of the building's thermal, or heat, envelope, such that insulation is provided at the roof deck, rather than at the ceiling level.

903.3.1.4.2 Heat trace/insulation. Heat trace/insulation shall only be allowed where approved by the fire code official for small sections of large diameter water-filled pipe.

(Reason: In the last few years, severe winters brought to light several issues with current practices for sprinklering attics, not the least of which was wet-pipe sprinklers in ventilated attics provided with space heaters, etc. for freeze protection of such piping. This practice is not acceptable for the protection of water-filled piping in a ventilated attic space as it does not provide a reliable means of maintaining the minimum 40 degrees required by NFPA, wastes energy, and presents a potential ignition source to the attic space. Listed antifreeze is specifically included because NFPA currently allows such even though there is no currently listed antifreeze at the time of development of these amendments. The intent of this amendment is to help reduce the large number of freeze breaks that have occurred in the past with water-filled wet-pipe sprinkler systems in the future, most specifically in attic spaces.)

*****Section 903.3.5; add a second paragraph to read as follows:***

[F] Water supply as required for such systems shall be provided in conformance with the supply requirements of the respective standards; however, every water-based fire protection system shall be designed with a 10 psi safety factor. Reference Section 507.4 for additional design requirements.

(Reason: To define uniform safety factor.)

*****Section 903.4; add a second paragraph after the exceptions to read as follows:***

[F] Sprinkler and standpipe system water-flow detectors shall be provided for each floor tap to the sprinkler system and shall cause an alarm upon detection of water flow for more than 45 seconds. All control valves in the sprinkler and standpipe systems except for fire department hose connection valves shall be electrically supervised to initiate a supervisory signal at the central station upon tampering.

(Reason: To avoid significant water losses. Consistent with amendment to IFC 905.9.)

*****Section 903.4.2; add second paragraph to read as follows:***

[F] The alarm device required on the exterior of the building shall be a weatherproof horn/strobe notification appliance with a minimum 75 candela strobe rating, installed as close as practicable to the fire department connection.

(Reason: Fire department connections are not always located at the riser; this allows the fire department faster access.)

*****Section 905.2; change to read as follows:***

[F] 905.2 Installation standard. Standpipe systems shall be installed in accordance with this section and NFPA 14. Manual dry standpipe systems shall be supervised with a minimum of 10 psig and a maximum of 40 psig air pressure with a high/low alarm.

(Reason: To define manual dry standpipe supervision requirements. Helps ensure the integrity of the standpipe system via supervision, such that open hose valves will result in a supervisory low air alarm.)

*****Section 905.3; add Section 905.3.9 and exception to read as follows:***

[F] 905.3.9 Buildings exceeding 10,000 sq. ft. In buildings exceeding 10,000 square feet in area per story and where any portion of the building's interior area is more than 200 feet (60960 mm) of travel, vertically and horizontally, from the nearest point of fire department vehicle access, Class I automatic wet or manual wet standpipes shall be provided.

Exceptions:

1. Automatic dry and semi-automatic dry standpipes are allowed as provided for in NFPA 14.
2. R-2 occupancies of four stories or less in height having no interior corridors.

(Reason: Allows for the rapid deployment of hose lines to the body of the fire.)

******Section 905.4, change Item 1., 3., and 5. and add Item 7. to read as follows:***

[F] 1. In every required ~~interior~~ exit stairway, a hose connection shall be provided for each story above and below grade plane. Hose connections shall be located at an intermediate landing between stories, unless otherwise approved by the fire code official.

2. {No change.}
3. In every exit passageway, at the entrance from the exit passageway to other areas of a building.
   Exception: Where floor areas adjacent to an exit passageway are reachable from an ~~interior~~ exit stairway hose connection by a ……{No change to rest.}
4. {No change.}

5. Where the roof has a slope less than four units vertical in 12 units horizontal (33.3-percent slope), each standpipe shall be provided with a two-way ~~a~~ hose connection ~~shall be~~ located to serve the roof or at the highest landing of an ~~interior~~ exit stairway with stair access to the roof provided in accordance with Section 1011.12.
6. {No change.}
7. When required by this Chapter, standpipe connections shall be placed adjacent to all required exits to the structure and at two hundred feet (200') intervals along major corridors thereafter, or as otherwise approved by the fire code official.

(Reason: Item 1., 3., and 5. amendments to remove 'interior' will help to clarify that such connections are required for all 'exit' stairways, to ensure firefighter capabilities are not diminished in these tall buildings, simply because the stair is on the exterior of the building. Item 5. reduces the amount of pressure required to facilitate testing, and provides backup protection for fire fighter safety. Item 7. allows for the rapid deployment of hose lines to the body of the fire.)

*****Section 905.9; add a second paragraph after the exceptions to read as follows:***

[F] Sprinkler and standpipe system water-flow detectors shall be provided for each floor tap to the sprinkler system and shall cause an alarm upon detection of water flow for more than 45 seconds. All control valves in the sprinkler and standpipe systems except for fire department hose connection valves shall be electrically supervised to initiate a supervisory signal at the central station upon tampering.

(Reason: To avoid significant water losses. Consistent with amendment to IFC 903.4.)

*****Section 907.1; add Section 907.1.4 and 907.1.4.1 to read as follows:***

[F] 907.1.4 Design standards. Where a new fire alarm system is installed, the devices shall be addressable. Fire alarm systems utilizing more than 20 smoke detectors shall have analog initiating devices.

(Reason: Provides for the ability of descriptive identification of alarms, and reduces need for panel replacement in the future. Updated wording to match the language of the new requirement at 907.5.2.3. Change of terminology allows for reference back to definitions of NFPA 72)

*****Section 907.2.1; change to read as follows:***

[F] 907.2.1 Group A. A manual fire alarm system that activates the occupant notification system in accordance with Section 907.5 shall be installed in Group A occupancies ~~where the~~ having an occupant load ~~due to the assembly occupancy is~~ of 300 or more persons or more than 100 persons above or below the lowest level of exit discharge. Group A occupancies not separated from one another in accordance with Section 707.3.~~-~~10 of the *International Building Code* shall be considered as a single occupancy for the purposes of applying this section. Portions of Group E occupancies occupied for assembly purposes shall be provided with a fire alarm system as required for the Group E occupancy.

Exception: {No change.}

Activation of fire alarm notification appliances shall:

1. Cause illumination of the *means of egress* with light of not less than 1 foot-candle (11 lux) at the walking surface level, and
2. Stop any conflicting or confusing sounds and visual distractions.

(Reason: Increases the requirement to be consistent with Group B requirement. Also addresses issue found in Group A occupancies of reduced lighting levels and other A/V equipment that distracts from fire alarm notification devices or reduces ability of fire alarm system to notify occupants of the emergency

condition.)

*****Section 907.2.3; change to read as follows:***

[F] 907.2.3 Group E. A manual fire alarm system that initiates the occupant notification signal utilizing an emergency voice/alarm communication system meeting the requirements of Section 907.5.2.2 and installed in accordance with Section 907.6 shall be installed in Group E educational occupancies. When *automatic sprinkler systems* or smoke detectors are installed, such systems or detectors shall be connected to the building fire alarm system. An approved smoke detection system shall be installed in Group E day care occupancies. Unless separated by a minimum of 100' open space, all buildings, whether portable buildings or the main building, will be considered one building for alarm occupant load consideration and interconnection of alarm systems.

Exceptions:

1. {No change.}
   1.1. Residential In-Home day care with not more than 12 children may use interconnected single station detectors in all habitable rooms. (For care of more than five children 2 1/2 or less years of age, see Section 907.2.6.)

{No change to remainder of exceptions.}

(Reason: To distinguish educational from day care occupancy minimum protection requirements. Further, to define threshold at which portable buildings are considered a separate building for the purposes of alarm systems. Exceptions provide consistency with State law concerning such occupancies.)

*****Section 907.2.13, Exception 3; change to read as follows:***

[F] 3. Open air portions of buildings with an occupancy in Group A-5 in accordance with Section 303.1 of the *International Building Code*; however, this exception does not apply to accessory uses including but not limited to sky boxes, restaurants and similarly enclosed areas.

(Reason: To indicate that enclosed areas within open air seating type occupancies are not exempted from automatic fire alarm system requirements.)

*****Section 907.4.2; add Section 907.4.2.7 to read as follows:***

[F] 907.4.2.7 Type. Manual alarm initiating devices shall be an approved double action type.

(Reason: Helps to reduce false alarms.)

*****Section 907.6.1; add Section 907.6.1.1 to read as follows:***

[F] 907.6.1.1 Wiring Installation. All fire alarm systems shall be installed in such a manner that a failure of any single initiating device or single open in an initiating circuit conductor will not interfere with the normal operation of other such devices. All signaling line circuits (SLC) shall be installed in such a way that a single open will not interfere with the operation of any addressable devices (Class A). Outgoing and return SLC conductors shall be installed in accordance with NFPA 72 requirements for Class A circuits and shall have a minimum of four feet separation horizontal and one foot vertical between supply and return circuit conductors. The initiating device circuit (IDC) from a signaling line circuit interface device may be wired Class B, provided the distance from the interface device to the initiating device is ten feet or less.

(Reason: To provide uniformity in system specifications and guidance to design engineers. Improves reliability of fire alarm devices and systems.)

******Section 907.6.3; delete all four Exceptions.***

(Reason: To assist responding personnel in locating the emergency event for all fire alarm systems.)

******Section 907.6.6; – add sentence at end of paragraph to read as follows:***

[F] See 907.6.3 for the required information transmitted to the supervising station.

(Reason: To assist responding personnel in locating the emergency event for all fire alarm systems. This was moved from 907.6.5.3 in the 2012 IFC and reworded to match new code language and sections.)

******Section 909.22; add to read as follows:***

[F] 909.22 Stairway or ramp pressurization alternative. Where the building is equipped throughout with an automatic sprinkler system in accordance with Section 903.3.1.1 and the stair pressurization alternative is chosen for compliance with Building Code requirements for a smokeproof enclosure, interior exit stairways or ramps shall be pressurized to a minimum of 0.10 inches of water (25 Pa) and a maximum of 0.35 inches of water (87 Pa) in the shaft relative to the building measured with all interior exit stairway and ramp doors closed under maximum anticipated conditions of stack effect and wind effect. Such systems shall comply with Section 909, including the installation of a separate fire-fighter's smoke control panel as per Section 909.16, and a Smoke Control Permit shall be required from the Fire Department as per Section 105.7.

[F] 909.22.1 Ventilating equipment. The activation of ventilating equipment for the stair or ramp pressurization system shall be by smoke detectors installed at each floor level at an approved location at the entrance to the smokeproof enclosure. When the closing device for the stairway or ramp shaft and vestibule doors is activated by smoke detection or power failure, mechanical equipment shall activate and operate at the required performance levels. Smoke detectors shall be installed in accordance with Section 907.3.

[F] 909.22.1.1 Ventilation systems. Smokeproof enclosure ventilation systems shall be independent of other building ventilation systems. The equipment, control wiring, power wiring and ductwork shall comply with one of the following:

1. Equipment, control wiring, power wiring and ductwork shall be located exterior to the building and directly connected to the smokeproof enclosure or connected to the smokeproof enclosure by ductwork enclosed by not less than 2-hour fire barriers constructed in accordance with Section 707 of the Building Code or horizontal assemblies constructed in accordance with Section 711 of the Building Code, or both.
2. Equipment, control wiring, power wiring and ductwork shall be located within the smokeproof enclosure with intake or exhaust directly from and to the outside or through ductwork enclosed by not less than 2-hour barriers constructed in accordance with Section 707 of the Building Code or horizontal assemblies constructed in accordance with Section 711 of the Building Code, or both.
3. Equipment, control wiring, power wiring and ductwork shall be located within the building if separated from the remainder of the building, including other mechanical equipment, by not less than 2-hour fire barriers constructed in accordance with Section 707 of the Building Code or horizontal assemblies constructed in accordance with Section 711 of the Building Code, or both.

Exceptions:

1. Control wiring and power wiring utilizing a 2-hour rated cable or cable system.
2. Where encased with not less than 2 inches (51 mm) of concrete.
3. Control wiring and power wiring protected by a listed electrical circuit protective systems with a fire-resistance rating of not less than 2 hours.

[F] 909.22.1.2 Standby power. Mechanical vestibule and stairway and ramp shaft ventilation systems and automatic fire detection systems shall be provided with standby power in accordance with Section 2702 of the Building Code.

[F] 909.22.1.3 Acceptance and testing. Before the mechanical equipment is approved, the system shall be tested in the presence of the fire code official to confirm that the system is operating in compliance with these requirements.

(Reason: To assist with enforcement of such as a smoke control system, as per Section 909.6.3, especially since a permit is now specifically required for such systems in the Fire Code. Also ensures that

a firefighter's override panel is provided as per 909.16 for such systems. The above amendment copies the applicable requirements for such systems from Section 909.20 of the Building Code into the Fire Code. Although the published code did copy the elevator pressurization requirements into the Fire Code, it did not copy over the stair pressurization requirements.)

******Section 910.2; change Exception 2. and 3.to read as follows:***

[F] 2. Only manual smoke and heat removal shall ~~not~~ be required in areas of buildings equipped with early suppression fast-response (ESFR) sprinklers. Automatic smoke and heat removal is prohibited.

3. Only manual smoke and heat removal shall ~~not~~ be required in areas of buildings equipped with control mode special application sprinklers with a response time index of $50(m*S)^{1/2}$ or less that are listed to control a fire in stored commodities with 12 or fewer sprinklers. Automatic smoke and heat removal is prohibited.

(Reason: Allows the fire department to control the smoke and heat during and after a fire event, while still prohibiting such systems from being automatically activated, which is a potential detriment to the particular sprinkler systems indicated.)

******Section 910.2; add subsections 910.2.3 with exceptions to read as follows:***

[F] 910.2.3 Group H. Buildings and portions thereof used as a Group H occupancy as follows:

1. In occupancies classified as Group H-2 or H-3, any of which are more than 15,000 square feet (1394 m^2) in single floor area.

   Exception: Buildings of noncombustible construction containing only noncombustible materials.

2. In areas of buildings in Group H used for storing Class 2, 3, and 4 liquid and solid oxidizers, Class 1 and unclassified detonable organic peroxides, Class 3 and 4 unstable (reactive) materials, or Class 2 or 3 water-reactive materials as required for a high-hazard commodity classification.

   Exception: Buildings of noncombustible construction containing only noncombustible materials.

(Reason: Maintains a fire protection device utilized in such occupancies where it is sometimes necessary to allow chemicals to burn out, rather than extinguish.)

*****Section 910.3; add section 910.3.4 to read as follows:***

[F] 910.3.4 Vent operation. Smoke and heat vents shall be capable of being operated by approved automatic and manual means. Automatic operation of smoke and heat vents shall conform to the provisions of Sections 910.3.2.1 through 910.3.2.3.

[F] 910.3.4.1 Sprinklered buildings. Where installed in buildings equipped with an approved automatic sprinkler system, smoke and heat vents shall be designed to operate automatically. The automatic operating mechanism of the smoke and heat vents shall operate at a temperature rating at least 100 degrees F (approximately 38 degrees Celsius) greater than the temperature rating of the sprinklers installed.

Exception: Manual only system per 910.2

[F] 910.3.4.2 Nonsprinklered buildings. Where installed in buildings not equipped with an approved automatic sprinkler system, smoke and heat vents shall operate automatically by actuation of a heat-responsive device rated at between 100°F (56°C) and 220°F (122°C) above ambient.

Exception: Listed gravity-operated drop out vents.

(Reason: Amendment continues to keep applicable wording from prior to the 2012 edition of the IFC. Specifically, automatic activation criteria is no longer specifically required in the published code. Specifying a temperature range at which smoke and heat vents should activate in sprinklered buildings helps to ensure that the sprinkler system has an opportunity to activate and control the fire prior to vent operation.)

*****Section 910.4.3.1; change to read as follows:***

[F] 910.4.3.1 Makeup air. Makeup air openings shall be provided within 6 feet (1829 mm) of the floor level. Operation of makeup air openings shall be ~~manual or~~ automatic. The minimum gross area of makeup air inlets shall be 8 square feet per 1,000 cubic feet per minute (0.74 m2 per 0.4719 m3/s) of smoke exhaust.

(Reason: Makeup air has been required to be automatic for several years now in this region when mechanical smoke exhaust systems are proposed. This allows such systems to be activated from the smoke control panel by first responders without having to physically go around the exterior of the building opening doors manually. Such requires a significant number of first responders on scene to conduct this operation and significantly delays activation and/or capability of the smoke exhaust system.)

*****Section 910.4.4; change to read as follows:***

[F] 910.4.4 Activation. The mechanical smoke removal system shall be activated ~~by manual controls only~~ automatically by the automatic sprinkler system or by an approved fire detection system. Individual manual controls shall also be provided.

Exception: Manual only systems per Section 910.2.

(Reason: The provision of a manual only mechanical smoke removal system does not provide equivalency with automatic smoke and heat vents. This amendment clarifies that the primary intent is for automatic systems, unless exceptions are provided as in 910.2 – consistent with the charging statements of the section.)

*****Section 912.2; add Section 912.2.3 to read as follows:***

[F] 912.2.3 Hydrant distance. An approved fire hydrant shall be located within 100 feet of the fire department connection as the fire hose lays along an unobstructed path.

(Reason: To accommodate limited hose lengths, improve response times where the FDC is needed to achieve fire control, and improve ease of locating a fire hydrant in those situations also. Also, consistent with NFPA 14 criteria.)

*****Section 913.2.1; add second paragraph and exception to read as follows:***

[F] When located on the ground level at an exterior wall, the fire pump room shall be provided with an exterior fire department access door that is not less than 3 ft. in width and 6 ft. – 8 in. in height, regardless of any interior doors that are provided. A key box shall be provided at this door, as required by Section 506.1.

Exception: When it is necessary to locate the fire pump room on other levels or not at an exterior wall, the corridor leading to the fire pump room access from the exterior of the building shall be provided with equivalent fire resistance as that required for the pump room, or as approved by the *fire code official*. Access keys shall be provided in the key box as required by Section 506.1.

(Reason: This requirement allows fire fighters safer access to the fire pump room. The requirement allows access without being required to enter the building and locate the fire pump room interior access door during a fire event. The exception recognizes that this will not always be a feasible design scenario for some buildings, and as such, provides an acceptable alternative to protect the pathway to the fire pump room.)

****Section 1006.2.2.6 Add a new Section 1006.2.2.6 as follows:**

1006.2.2.6 Electrical Rooms. For electrical rooms, special exiting requirements may apply. Reference the electrical code as adopted.

(Reason: Cross reference necessary for coordination with the NEC which has exiting requirements as well.)

*****Section 1009.1; add the following Exception 4:***

Exceptions:

{previous exceptions unchanged}

4. Buildings regulated under State Law and built in accordance with State registered plans, including any variances or waivers granted by the State, shall be deemed to be in compliance with the requirements of Section 1009.

(Reason: To accommodate buildings regulated under Texas State Law and to be consistent with amendments to Chapter 11.)

*****Section 1010.1.9.4 Bolt Locks; amend exceptions 3 and 4 as follows:***

Exceptions:

3. Where a pair of doors serves an *occupant load* of less than 50 persons in a Group B, F, M or S occupancy. {*Remainder unchanged*}
4. Where a pair of doors serves a Group A, B, F, M or S occupancy {*Remainder unchanged*}

(Reason: Application to M occupancies reflects regional practice; No. 4 expanded to Group A due to it being a similar scenario to other uses; No. 4 was regional practice.)

Option A

*****Section 1015.8 Window Openings. No amendment necessary:**

Option B

*****Section 1015.8 Window Openings. REVISE text as follows:**

1. Operable windows where the top of the sill of the opening is located more than ~~75 feet (22 860 mm)~~ 55 feet (16 764 mm) above the finished grade or other surface below and that are provided with window fall prevention devices that comply with ASTM F 2006.

(Reason: In Option B jurisdictions, change "75 feet" to "55 feet".)

*****Section 1020.1 Construction; add exception 6 to read as follows:***

6. In group B occupancies, corridor walls and ceilings need not be of fire-resistive construction within a single tenant space when the space is equipped with approved automatic smoke-detection within the corridor. The actuation of any detector shall activate self-annunciating alarms audible in all areas within the corridor. Smoke detectors shall be connected to an approved automatic fire alarm system where such system is provided.

(Reason: Revise the 2012 published NCTCOG amendment to this section to now read closer to that of the City of Dallas 2012 amendment.)

****Section 1029.1.1.1 Delete this section. Spaces under grandstands and bleachers;**

(*Reason: Unenforceable*.)

*****Section 1101.1 Scope. add exception to Section 1101.1 as follows:**

Exception: Components of projects regulated by and registered with Architectural Barriers Division of Texas Department of Licensing and Regulation shall be deemed to be incompliance with the requirements of this chapter.

(Reason: To accommodate buildings regulated under state law. Further clarified in 2015 to mean components that are specifically addressed by TDLR shall be exempt.)

*****Section 1203.1; amend to read as follows:**

*****1203.1 General.** Buildings shall be provided with natural ventilation in accordance with Section 1203.4, or mechanical ventilation in accordance with the *International Mechanical Code*.

Where air infiltration rate in a *dwelling unit* is ~~less than~~ 5 air changes or less per hour when tested with a blower door at a pressure 0.2 inch w.c. (50 Pa) in accordance with Section 402.4.1.2 of the *International Energy Conservation Code*, the *dwelling unit* shall be ventilated by mechanical means in accordance with Section 403 of the *International Mechanical Code*.

(Reason: See IECC change to performance testing. Whole-house ventilation is recognized as necessary).

*****Table 1505.1; delete footnote c and replace footnote b with the following:***

b. Non-classified roof coverings shall be permitted on buildings of U occupancies having not more than 120 sq. ft. of protected roof area. When exceeding 120 sq. ft. of protected roof area, buildings of U occupancies may use non-rated non-combustible roof coverings.

~~c~~. [delete]

(Reason: Conforms to regional practice affording increased fire protection.)

****Section 1505.7; delete the section**
(Reason: Conforms to regional practice.)

*****Section 1510.1; add a sentence to read as follows:***

1510.1 General. Materials and methods of applications used for recovering or replacing an existing roof covering shall comply with the requirements of Chapter 15. All individual replacement shingles or shakes shall be in compliance with the rating required by Table 1505.1.

{text of exception unchanged}

(Reason: Relocated the text to more appropriate place. Previously was footnote "b" to Table 1505.1)

******Section 1704.2, Special inspections and tests is amended to read as follows:***

1704.2 Special inspections and tests. Where application is made to the Building Official for construction as specified in Section 105, the owner or the owner's authorized agent, or the registered design professional in responsible charge, other than the contractor, shall employ one or more approved agencies to provide special inspections and tests during construction on the types of work listed under Section 1705 and identify the approved agencies to the Building Official. The special inspector shall not be employed by the contractor. These special inspections and tests are in addition to the inspections identified by the Building Official that are identified in Section 110.

(Reason: The RDPRC should be included in the documentation.)

******Section 1704.2.1, Special inspector qualifications, is amended to read as follows:***

1704.2.1 Special inspector qualifications. Prior to the start of construction and or upon request, the approved agencies shall provide written documentation to the registered design professional in responsible charge and the building official demonstrating the competence and relevant experience or training of the special inspectors who will perform the special inspections and tests during construction. [Remainder unchanged]

(Reason: The RDPRC should be included in the documentation.)

******Section 1704.2.4, Report requirement, is amended to read as follows:***

1704.2.4 Report requirement. Approved agencies shall keep records of special inspections and tests. The approved agency shall submit reports of special inspections and tests to the Building Official upon request, and to the registered design professional in responsible charge. Individual inspection reports ~~[Reports]~~ shall indicate that work inspected or tested was or was not completed in conformance to approved construction documents. [Remainder unchanged]

(Reason: The RDPRC should be included in the documentation and building official can choose to request reports as required.)

******Section 1704.2.5.2, Fabricator approval, is amended to read as follows:***

1704.2.5.1 Fabricator approval. Special inspections during fabrications required by Section 1704 are not required where the work is done on the premises of a fabricator registered and approved to perform such work without special inspection. Approval shall be based upon review of the fabricator's written procedural and quality control manuals and periodic auditing of fabrication practices by an approved agency, or a fabricator that is enrolled in a nationally accepted inspections program. At completion of fabrication, the acceptable or approved fabricator shall submit a certificate of compliance to the owner or the owner's authorized agent or the registered design professional in responsible charge, ~~for submittal to the building official as specified in Section 1704.5~~ stating that the work was performed in accordance with the approved construction documents. The certificate of compliance shall also be made available to the Building Official upon request.

(Reason: The RDPRC should be included in the documentation and fabricators can be accepted or approved.)

*****Section 2901.1; add a sentence to read as follows:***

[P] 2901.1 Scope. {*existing text to remain*} The provisions of this Chapter are meant to work in coordination with the provisions of Chapter 4 of the International Plumbing Code. Should any conflicts arise between the two chapters, the Building Official shall determine which provision applies.

(Reason: Gives building official discretion.)

*****Section 2902.1; add a second paragraph to read as follows:***

In other than E Occupancies, the minimum number of fixtures in Table 2902.1 may be lowered, if requested in writing, by the applicant stating reasons for a reduced number and approved by the Building Official.

(Reason: To allow flexibility for designer to consider specific occupancy needs.)

*****Table 2902.1; add footnote f to read as follows:***

f. Drinking fountains are not required in M Occupancies with an occupant load of 100 or less, B Occupancies with an occupant load of 25 or less, and for dining and/or drinking establishments.

(Reason: Adjustment meets the needs of specific occupancy types.)

****Section 2902.1.3; add new Section 2902.1.3 to read as follows:**

2902.1.3 Additional fixtures for food preparation facilities. In addition to the fixtures required in this Chapter, all food service facilities shall be provided with additional fixtures set out in this section.

2902.1.3.1 Hand washing lavatory. At least one hand washing lavatory shall be provided for use by employees that is accessible from food preparation, food dispensing and ware washing areas. Additional hand washing lavatories may be required based on convenience of use by employees.

2902.1.3.2 Service sink. In new or remodeled food service establishments, at least one service sink or one floor sink shall be provided so that it is conveniently located for the cleaning of mops or similar wet floor cleaning tool and for the disposal of mop water and similar liquid waste. The location of the service sink(s) and/or mop sink(s) shall be approved by the **<Jurisdiction's>** health department.

(Reason: Coordinates Health law requirements with code language for consistent regional practice.)

*****Section 3002.1 Hoistway Enclosure Protection.** add exceptions to read as follows:

Exceptions:
1. Elevators wholely located within atriums complying with Section 404 shall not require hoistway enclosure protection.

2. Elevators in open or enclosed parking garages that serve only the parking garage, and complying with Sections 406.5 and 406.6, respectively, shall not require hoistway enclosure protection.

(Reason: Provides specific Code recognition that elevators within atriums and within parking garages do not require hoistway enclosure protection.)

*****Section 3005.4 Machine rooms, control rooms, machinery spaces and control spaces.**

Delete text as follows: ~~Elevator machine rooms, control rooms, control spaces and machinery spaces outside of but attached to a hoistway that have openings into the hoistway shall be enclosed with fire barriers constructed in accordance with Section 707 or horizontal assemblies constructed in accordance with Section 711, or both~~.

Revise text to read:

Elevator machine rooms, control rooms, control spaces and machinery spaces shall be enclosed with fire barriers constructed in accordance with Section 707 or horizontal assemblies constructed in accordance with Section 711, or both.

[Remainder unchanged]

(Reason: This amendment eliminates code language so as to be consistent with the regional goal to require passive enclosures of these areas unless a hoistway enclosure is not required by other Code provisions. See companion change to eliminate fire sprinklers thereby eliminating shunt trip.)

*****Section 3005.7** add a Section 3005.7 as follows:

3005.7 Fire Protection in Machine rooms, control rooms, machinery spaces and control spaces.

3005.7.1 **Automatic sprinkler system.** The building shall be equipped throughout with an automatic sprinkler system in accordance with Section 903.3.1.1, except as otherwise permitted by Section

903.3.1.1.1 and as prohibited by Section 3005.7.2.1.

3005.7.2.1 **Prohibited locations.** Automatic sprinklers shall not be installed in machine rooms, elevator machinery spaces, control rooms, control spaces and elevator hoist-ways.

3005.7.2.2 **Sprinkler system monitoring.** The sprinkler system shall have a sprinkler control valve supervisory switch and water-flow initiating device provided for each floor that is monitored by the building's fire alarm system.

3005.7.3 **Water protection.** An approved method to prevent water from infiltrating into the hoistway enclosure from the operation of the automatic sprinkler system outside the elevator lobby shall be provided.

3005.7.4 **Shunt trip.** Means for elevator shutdown in accordance with Section 3005.5 shall not be installed.

(Reason: Firefighter and public safety. This amendment eliminates the shunt trip requirement of the International Building Code Section 3005.5 for the purpose of elevator passenger and firefighter safety. The new section above is intended to be identical to Sections 3007.2, 3007.3, and 3007.4 for Fire Service Access Elevators and Sections 3008.2, 3008.3 and 3008.4 for Occupant Evacuation Elevators.)

*****Section 3005.8** add Section 3005.8 as follows:

3005.8 Storage. Storage shall not be allowed within the elevator machine room, control room, machinery spaces and or control spaces. Provide approved signage at each entry to the above listed locations stating: "No Storage Allowed.

(Reason: Reinforces the need to maintain space clean and free of combustibles. See companion change to eliminate fire sprinklers therein, to always require an enclosure - with IBC 3005.4 exceptions deleted - resulting in the limited need for a shunt trip system.)

Option A

*****Section 3006.2, Hoistway opening protection required.** Revise text as follows:

5. The building is a high rise and the elevator hoistway is more than 75 feet (22 860 mm) in height. The height of the hoistway shall be measured from the lowest floor at or above grade to the highest floors served by the hoistway.

Option B

*****Section 3006.2, Hoistway opening protection required.** Revise text as follows:

5. The building is a high rise and the elevator hoistway is more than ~~75 feet (22 860 mm)~~ 55 feet (16 764 mm) in height. The height of the hoistway shall be measured from the lowest floor at or above grade to the highest floors served by the hoistway.

(Reason: 2015 IBC text does not address hoistways that are > 75' in height that are both below grade and above grade but not located above the high rise classification nor does the IBC address hoistways wholely located above grade such as those that serve above sky lobbies.)

*****Section 3109.1; change to read as follows:***

3109.1 General. Swimming pools shall comply with the requirements of sections 3109.2 through 3109.5 and other applicable sections of this code and complying with applicable state laws.

(Reason: To recognize "state requirements".)

End

Recommended Amendments to the 2015 International Residential Code

North Central Texas Council of Governments Region

The following sections, paragraphs, and sentences of the *2012 International Residential Code* are hereby amended as follows: Standard type is text from the IRC. Underlined type is text inserted. ~~Lined through type is deleted text from IRC.~~ A double asterisk at the beginning of a section identifies an amendment carried over from the 2012 edition of the code and a triple asterisk identifies a new or revised amendment with the 2015 code.

In 2009, **the State Legislature enacted SB 1410 prohibiting cities from enacting fire sprinkler mandates in residential dwellings.** However, jurisdictions with ordinances that required sprinklers for residential dwellings prior to and enforced before January 1, 2009, may remain in place. Reference; Section R313 Automatic Fire Sprinkler Systems.

The energy provisions in Chapter 11 of the International Residential Code (IRC) mirror the requirements of the International Energy Conservation Code (IECC). IRC Chapter 11 is deleted in its entirety. **Reference the 2015 IECC for energy code provisions and recommended amendments.**

*****Section R102.4; change to read as follows:***

R102.4 Referenced codes and standards. The *codes*, when specifically adopted, and standards referenced in this *code* shall be considered part of the requirements of this *code* to the prescribed extent of each such reference and as further regulated in Sections R102.4.1 and R102.4.2. Whenever amendments have been adopted to the referenced *codes* and standards, each reference to said *code* and standard shall be considered to reference the amendments as well. Any reference made to NFPA 70 or the *Electrical Code* shall mean the *Electrical Code* as adopted.

(Reason: Legal wording to recognize locally adopted codes and amendments adopted with referenced codes. Note: the former ICC Electrical Code is now Appendix K of the IBC, but no longer called by that name. If adopting in that location, be sure to include language that includes structures under IRC and IBC.)

*****Section R104.10.1 Flood Hazard areas; delete this section.***

(Reason: Flood hazard ordinances may be administered by other departments within the city.)

*****Section R105.3.1.1& R106.1.4; delete these sections.***

(Reason: Floodplain provisions are addressed locally.)

*****Section R110 (R110.1 through R110.5); delete the section.***

(Reason: Issuing CO's for residences is not a common practice in the area.)

*****Section R202; change definition of "Townhouse" to read as follows:***

TOWNHOUSE. A single-family dwelling unit constructed in a group of three or more attached units separated by property lines in which each unit extends from foundation to roof and with a *yard* or *public way* on at least two sides.

(Reason: To distinguish Townhouses on separate lots.)

*****Table R301.2 (1); fill in as follows:***

GROUND SNOW LOAD	WIND DESIGN				SEISMIC DESIGN CATEGORY[f]	SUBJECT TO DAMAGE FROM			WINTER DESIGN TEMP[e]	ICE BARRIER UNDER-LAYMENT[h]	FLOOD HAZARDS[g]	AIR FREEZING INDEX[i]	MEAN ANNUAL TEMP[j]
	SPEED[d] (MPH)	Topographic Effects[k]	Special Wind Region[L]	Windborne Debris Zone[m]		Weathering[a]	Frost Line Depth[b]	Termite[c]					
5 lb/ft	115 (3 sec-gust)/ 76 fastest mile	No	No	No	A	Moderate	6"	Very Heavy	22^0 F	No	Local Code	150	64.9^0 F

(Reason: To promote regional uniformity.)

*****Section R302.1; add exception #6 to read as follows:***

Exceptions: *{previous exceptions unchanged}*

6. Open non-combustible carport structures may be constructed when also approved within adopted ordinances.

(Reason: Refers to other ordinances, such as zoning ordinances.)

*****Section R302.3; add Exception #3 to read as follows:***

Exceptions:

1. *{existing text unchanged}*

2. *{existing text unchanged}*

3. Two-family dwelling units that are also divided by a property line through the structure shall be separated as required for townhouses.

(Reason: Provide guidance for a common construction method in this area. Correlates with amendment to IRC Section R202 Townhouse definition.)

******Section R302.5.1; change to read as follows:***

R302.5.1 Opening protection. Openings from a private garage directly into a room used for sleeping purposes shall not be permitted. Other openings between the garage and residence shall be equipped with solid wood doors not less than 13/8 inches (35 mm) in thickness, solid or honeycomb core steel

doors not less than 13/8 inches (35 mm) thick, or 20-minute fire-rated doors ~~equipped with a self-closing device~~.

(Reason: Absence of data linking self-closing devices to increased safety. Self-closing devices often fail to close the door entirely.)

*****Section R303.3, Exception; amend to read as follows:***

Exception: {existing text unchanged**}** Exhaust air from the space shall be exhaust out to the outdoors unless the space contains only a water closet, a lavatory, or water closet and a lavatory may be ventilated with an approved mechanical recirculating fan or similar device designed to remove odors from the air.

(Reason: Consistent with common local practice as recirculating fans are recognized as acceptable air movement.)

Section R313 Automatic Fire Sprinkler Systems. *Delete subsections in their entirety.*

(Reason: In 2009, the State Legislature enacted SB 1410 prohibiting cities from enacting fire sprinkler mandates in residential dwellings. However, jurisdictions with ordinances that required sprinklers for residential dwellings prior to and enforced before January 1, 2009, may remain in place.*)*

******Section R315.2.2 Alterations, repairs and additions. Amend to read as follows:***

Exception:
2. Installation, alteration or repairs of electrical powered *{remaining text unchanged}*

(Reason: Code intent is to protect against the products of combustion.)

*****Section R322 Flood Resistant Construction. Deleted Section.***

(Reason: Floodplain hazard ordinances may be administered by other departments within the city.)

******Section R326 Swimming Pools, Spas and Hot Tubs. Amended to read as follows:***

R326.1 General. The design and construction of pools and spas shall comply with the ~~International Swimming Pool and Spa Code~~ **2015 IRC Appendix Q. Swimming Pools, Spas and Hot Tubs.**

(Reason: New Pool and Spa code not under review. In lieu of adoption of new pool code, previous edition of 2012 Appendix G is proposed for continued use but renamed 2015 Appendix Q.)

****Section R401.2, amended by adding a new paragraph following the existing paragraph to read as follows.**

Section R401.2. Requirements. *{existing text unchanged} ...*
Every foundation and/or footing, or any size addition to an existing post-tension foundation, regulated by this code shall be designed and sealed by a Texas-registered engineer.

(Amendment to 2012 IRC carried forward to 2015 IRC.)

*****Section R602.6.1; amend the following:***

R602.6.1 Drilling and notching of top plate. When piping or ductwork is placed in or partly in an exterior wall or interior load-bearing wall, necessitating cutting, drilling or notching of the top plate by more than 50 percent of its width, a galvanized metal tie not less than 0.054 inch thick (1.37 mm) (16 Ga) and ~~1 ½ inches (38) mm~~ 5 inches (127 mm) wide shall be fastened across and to the plate at each side of the opening with not less than eight 10d (0.148 inch diameter) having a minimum length of 1 ½ inches (38 mm) at each side or equivalent. Fasteners will be offset to prevent splitting of the top plate material. The

metal tie must extend a minimum of 6 inches past the opening. See figure R602.6.1. {remainder unchanged}

(Amendment to 2012 IRC carried forward to 2015 IRC.)

*****Figure R602.6.1; delete the figure and insert the following figure:***

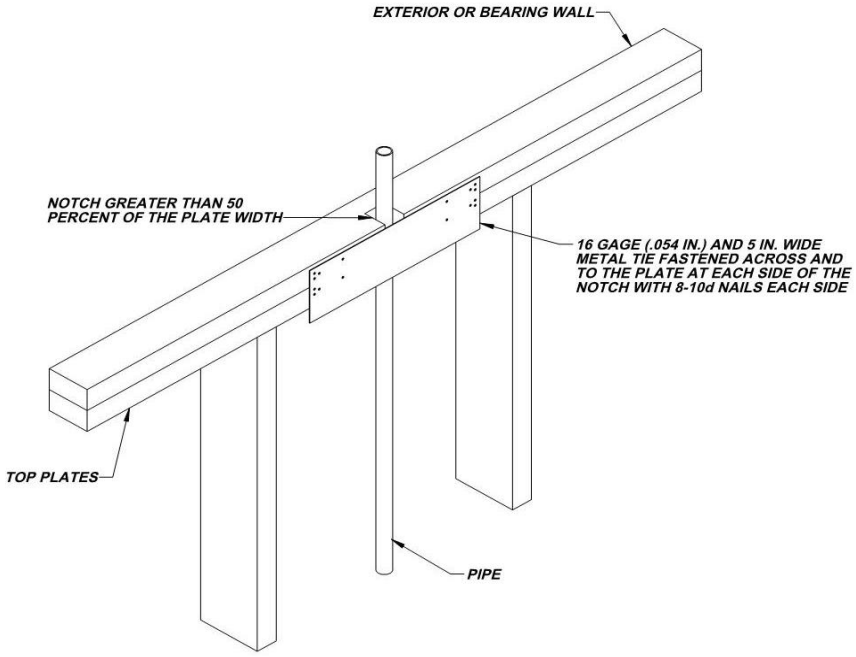

(Amendment to 2012 IRC carried forward to 2015 IRC also provides additional assurance of maintaining the integrity of the framing by spreading the nailing pattern.)

*****Section R703.8.4.1; add a second paragraph to read as follows:***

In stud framed exterior wall**s**, all ties shall be anchored to studs as follows:

1. When studs are 16 in (407 mm) o.c., stud ties shall be spaced no further apart than 24 in (737 mm) vertically starting approximately 12 in (381 mm) from the foundation; or

2. When studs are 24 in (610 mm) o.c., stud ties shall be spaced no further apart than 16 in (483 mm) vertically starting approximately 8 in (254 mm) from the foundation.

(Reason: (Amendment to 2012 IRC carried forward to 2015 IRC. Provide easy to install and inspect dimensions to clarify how to anchor and to distinguish "studs" from other types of construction.)

*****Section R902.1; Amend and add exception #3 to read as follows:***

R902.1 Roofing covering materials. Roofs shall be covered with materials as set forth in Sections R904 and R905. Class A, B, or C roofing shall be installed ~~in areas designated by law as requiring their use or when the edge of the roof is less than 3 feet from a lot line~~. *{remainder unchanged}*

Exceptions:

1. *{text unchanged}*
2. *{text unchanged}*
3. *{text unchanged}*
4. *{text unchanged}*
5. Non-classified roof coverings shall be permitted on one-story detached *accessory structures* used as tool and storage sheds, playhouses and similar uses, provided the floor area does not exceed (area defined by jurisdiction).

(Reason: to address accessory structures Group U exempt from permits per Section R105.2)

****** Chapter 11 [RE] – Energy Efficiency is deleted in its entirety and replaced with the following:***

N1101.1 Scope. This chapter regulates the energy efficiency for the design and construction of buildings regulated by this code.

N1101.2 Compliance. Compliance shall be demonstrated by meeting the requirements of the residential provisions of 2015 International Energy Conservation Code.

(Reason: The text of the residential provisions of the 2015 IRC is extracted from the 2015 edition of the International Energy Conservation Code—Residential Provisions and has been editorially revised to conform to the scope and application of this code. The section numbers appearing in parenthesis after each section number are the section numbers of the corresponding text in the International Energy Conservation Code—Residential Provisions. This approach simply minimizes the number of amendments to the IRC)

*****Section M1305.1.3; change to read as follows:***

M1305.1.3 Appliances in attics. *Attics* containing *appliances* shall be provided *. . . {bulk of paragraph unchanged} . . .* sides of the *appliance* where access is required. The clear access opening dimensions shall be a minimum of 20 inches by 30 inches (508 mm by 762 mm), or larger and large enough to allow removal of the largest *appliance.* A walkway to an appliance shall be rated as a floor as approved by the building official. As a minimum, for *access* to the attic space, provide one of the following:

1. A permanent stair.
2. A pull down stair with a minimum 300 lb (136 kg) capacity.
3. An *access* door from an upper floor level.

Exceptions:

1. The passageway and level service space are not required where the *appliance* can be serviced and removed through the required opening.
2. Where the passageway is unobstructed…*{remaining text unchanged}*

(Reason: To provide a safe means of accessibility to appliances in attics and to allow for different types of construction limitations. Consistent with regional amendment to IFGC and IMC 306.3.)

*****Section M1411.3; change to read as follows:***

M1411.3 Condensate disposal. Condensate from all cooling coils or evaporators shall be conveyed from the drain pan outlet to ~~an *approved* place of disposal~~ a sanitary sewer through a trap, by means of a direct or indirect drain. *{remaining text unchanged}*

(Reason: Reflects regional practice and to reduce excessive runoff into storm drains.)

*****Section M1411.3.1, Items 3 and 4; add text to read as follows:***

M1411.3.1 Auxiliary and secondary drain systems. *{bulk of paragraph unchanged}*

1. *{text unchanged}*
2. *{text unchanged}*
3. An auxiliary drain pan… *{bulk of text unchanged}…* with Item 1 of this section. A water level detection device may be installed only with prior approval of the *building official.*
4. A water level detection device… *{bulk of text unchanged}…* overflow rim of such pan. A water level detection device may be installed only with prior approval of the *building official*.

(Reason: Reflects standard practice in this area.)

*****Section M1411.3.1.1; add text to read as follows:***

M1411.3.1.1 Water-level monitoring devices. On down-flow units …*{bulk of text unchanged}*… installed in the drain line. A water level detection device may be installed only with prior approval of the *building official.*

(Reason: Reflects standard practice in this area.)

****M1503.4 Makeup Air Required Amend and add exception as follows:**

M1503.4 Makeup air required. Exhaust hood systems capable of exhausting in excess of 400 cubic feet per minute (0.19 m3/s) shall be provided with makeup air at a rate approximately equal to the difference between the exhaust air rate and 400 cubic feet per minute. Such makeup air systems shall be equipped with a means of closure and shall be automatically controlled to start and operate simultaneously with the exhaust system.

Exception: Where all appliances in the house are of sealed combustion, power-vent, unvented, or electric, the exhaust hood system shall be permitted to exhaust up to 600 cubic feet per minute (0.28 m3/s) without providing makeup air. Exhaust hood systems capable of exhausting in excess of 600 cubic feet per minute (0.28 m3/s) shall be provided with a makeup air at a rate approximately equal to the difference between the exhaust air rate and 600 cubic feet per minute.

(Reason: Exception requires makeup air equaling the amount above and beyond 400 cfm for larger fan which will address concerns related to "fresh" air from the outdoors in hot humid climates creating a burden on HVAC equipment and negative efficiency impacts from back-drafting and wasted energy.

*****Section M2005.2; change to read as follows:***

M2005.2 Prohibited locations. Fuel-fired water heaters shall not be installed in a room used as a storage closet. Water heaters located in a bedroom or bathroom shall be installed in a sealed enclosure

so that *combustion air* will not be taken from the living space. Access to such enclosure may be from the bedroom or bathroom when through a solid door, weather-stripped in accordance with the exterior door air leakage requirements of the *International Energy Conservation Code* and equipped with an *approved* self-closing device. Installation of direct-vent water heaters within an enclosure is not required

(Reason: Corresponds with the provisions of IFGC Section 303, exception #5.)

*****Section G2408.3 (305.5); delete.***

(Reason: This provision does not reflect standard practice in this area.)

*****Section G2415.2.1 (404.2.1); add a second paragraph to read as follows:***

Both ends of each section of medium pressure gas piping shall identify its operating gas pressure with an *approved* tag. The tags are to be composed of aluminum or stainless steel and the following wording shall be stamped into the tag:

"WARNING: 1/2 to 5 psi gas pressure - Do Not Remove"

(Reason: To protect homeowners and plumbers.)

*****Section G2415.2.2 (404.2.2); add an exception to read as follows:***

Exception: Corrugated stainless steel tubing (CSST) shall be a minimum of 1/2" (18 EDH).

(Reason: Pipe less than 1/2" has a history in this region of causing whistling.)

*****Section G2415.12 (404.12); change to read as follows:***

G2415.12 (404.12) Minimum burial depth. Underground *piping systems* shall be installed a minimum depth of ~~12 inches (305 mm)~~ 18 inches (457 mm) below grade, ~~except as provided for in Section G2415.12.1.~~

(Reason: To provide increased protection to piping systems.)

*****Section G2417.1 (406.1); change to read as follows:***

G2417.1 (406.1) General. Prior to acceptance and initial operation, all *piping* installations shall be inspected and *pressure tested* to determine that the materials, design, fabrication, and installation practices comply with the requirements of this *code*. The *permit* holder shall make the applicable tests prescribed in Sections 2417.1.1 through 2417.1.5 to determine compliance with the provisions of this *code*. The *permit* holder shall give reasonable advance notice to the *building official* when the *piping system* is ready for testing. The *equipment*, material, power and labor necessary for the inspections and test shall be furnished by the *permit* holder and the *permit* holder shall be responsible for determining that the work will withstand the test pressure prescribed in the following tests.

(Reason: To utilize language used in the IPC regarding who is responsible for testing procedures.)

*****Section G2417.4; change to read as follows:***

G2417.4 (406.4) Test pressure measurement. Test pressure shall be measured with a monometer or with a pressure-measuring device designed and calibrated to read, record, or indicate a pressure loss caused by leakage during the pressure test period. The source of pressure shall be isolated before the pressure tests are made. ~~Mechanical gauges used to measure test pressures shall have a range such that the highest end of the scale is not greater than five times the test pressure.~~

(Reason: To require the use of more accurate diaphragm gauges. Spring gauges do not provide

accurate measurement below approximately 17 psig.)

*****Section G2417.4.1; change to read as follows:***

G2417.4.1 (406.4.1) Test pressure. The test pressure to be used shall be no less than 3 psig (20 kPa gauge), or at the discretion of the Code Official, the piping and valves may be tested at a pressure of at least six (6) inches (152 mm) of mercury, measured with a manometer or slope gauge. ~~irrespective of design pressure. Where the test pressure exceeds 125 psig (862 kPa gauge), the test pressure shall not exceed a value that produces a hoop stress in the piping greater than 50 percent of the specified minimum yield strength of the pipe.~~ For tests requiring a pressure of 3 psig, diaphragm gauges shall utilize a dial with a minimum diameter of three and one half inches (3 ½"), a set hand, 1/10 pound incrementation and pressure range not to exceed 6 psi for tests requiring a pressure of 3 psig. For tests requiring a pressure of 10 psig, diaphragm gauges shall utilize a dial with a minimum diameter of three and one-half inches (3 ½"), a set hand, a minimum of 2/10 pound incrementation and a pressure range not to exceed 20 psi. For welded piping, and for piping carrying gas at pressures in excess of fourteen (14) inches water column pressure (3.48 kPa) (1/2 psi) and less than 200 inches of water column pressure (52.2 kPa) (7.5 psi), the test pressure shall not be less than ten (10) pounds per square inch (69.6 kPa). For piping carrying gas at a pressure that exceeds 200 inches of water column (52.2 kPa) (7.5 psi), the test pressure shall be not less than one and one-half times the proposed maximum working pressure.

Diaphragm gauges used for testing must display a current calibration and be in good working condition. The appropriate test must be applied to the diaphragm gauge used for testing

(Reason: To provide for lesser pressures to coordinate with the use of more accurate diaphragm gauges.)

*****Section G2417.4.2; change to read as follows:***

G2417.4.2 (406.4.2) Test duration. The test duration shall be held for a length of time satisfactory to the *Building Official*, but in no case for ~~be not~~ less than ~~10~~ fifteen (15) minutes. For welded *piping*, and for *piping* carrying gas at pressures in excess of fourteen (14) inches water column pressure (3.48 kPa), the test duration shall be held for a length of time satisfactory to the *Building Official*, but in no case for less than thirty (30) minutes.

(Reason: To comply with accepted regional practices.)

*****Section G2420.1 (406.1); add Section G2420.1.4 to read as follows:***

G2420.1.4 Valves in CSST installations. Shutoff *valves* installed with corrugated stainless steel (CSST) *piping systems* shall be supported with an approved termination fitting, or equivalent support, suitable for the size of the *valves*, of adequate strength and quality, and located at intervals so as to prevent or damp out excessive vibration but in no case greater than 12-inches from the center of the *valve*. Supports shall be installed so as not to interfere with the free expansion and contraction of the system's *piping*, fittings, and *valves* between anchors. All *valves* and supports shall be designed and installed so they will not be disengaged by movement of the supporting *piping*.

(Reason: To provide proper security to CSST valves. These standards were established in this region in 1999 when CSST was an emerging technology.)

*****Section G2420.5.1 (409.5.1); add text to read as follows:***

G2420.5.1 (409.5.1) Located within the same room. The shutoff valve …*{bulk of paragraph unchanged}*… in accordance with the appliance manufacturer's instructions. A secondary shutoff valve must be installed within 3 feet (914 mm) of the firebox if appliance shutoff is located in the firebox.

(Reason: Reflects regional practice and provides an additional measure of safety.)

*****Section G2421.1 (410.1); add text and Exception to read as follows:***

G2421.1 (410.1) Pressure regulators. A line *pressure regulator* shall be … *{bulk of paragraph unchanged}… approved* for outdoor installation. Access to *regulators* shall comply with the requirements for access to *appliances* as specified in Section M1305.

> **Exception:** A passageway or level service space is not required when the *regulator* is capable of being serviced and removed through the required *attic* opening.

(Reason: To require adequate access to regulators.)

*****Section G2422.1.2.3 (411.1.3.3); delete Exception 1 and Exception 4.***

(Reason: To comply with accepted regional practices.)

*****Section G2445.2 (621.2); add Exception to read as follows:***

G2445.2 (621.2) Prohibited use. One or more *unvented room heaters* shall not be used as the sole source of comfort heating in a *dwelling unit*.

> **Exception:** Existing *approved unvented room heaters* may continue to be used in *dwelling units*, in accordance with the *code* provisions in effect when installed, when *approved* by the *Building Official* unless an unsafe condition is determined to exist as described in *International Fuel Gas Code* Section 108.7 of the Fuel Gas Code.

(Reason: Gives code official discretion.)

*****Section G2448.1.1 (624.1.1); change to read as follows:***

G2448.1.1 (624.1.1) Installation requirements. The requirements for *water heaters* relative to access, sizing, *relief valves*, drain pans and scald protection shall be in accordance with this *code.*

(Reason: To clarify installation requirements. Also corresponds with amendments regarding water heater access.)

***** Section P2801.6.1; change to read as follows:**

Section P2801.6.1 Pan size and drain. The pan shall be not less than 11/2 inches (38 mm) in depth and shall be of sufficient size and shape to receive all dripping or condensate from the tank or water heater. The pan shall be drained by an indirect waste pipe having a diameter of not less than 3/4 inch (19 mm). Piping for safety pan drains shall be of those materials listed in Table 605.4.
Multiple pan drains may terminate to a single discharge piping system when *approved* by the administrative authority and permitted by the manufactures installation instructions and installed with those instructions.

***** Section P2804.6.1; change to read as follows:**

Section P2804.6.1 Requirements for discharge piping. The discharge piping serving a pressure relief valve, temperature relief valve or combination thereof shall:

1. Not be directly connected to the drainage system.
2. Discharge through an air gap ~~located in the same room as the water heater.~~
3. Not be smaller than the diameter of the outlet of the valve served and shall discharge full size to the air gap.

4. Serve a single relief device and shall not connect to piping serving any other relief device or equipment.

   Exception: Multiple relief devices may be installed to a single T & P discharge piping system when approved by the administrative authority and permitted by the manufactures installation instructions and installed with those instructions.

5. Discharge ~~to the floor~~, to an indirect waste receptor or to the outdoors.

   [remainder unchanged]

(Reason: To ensure the T&P is ran to the exterior.)

*****Section P2801.7; add Exception to read as follows:***

Exceptions:

1. Electric Water Heater.

(Reason: To coordinate with Section 2408.2 of the IRC, which recognizes this exception.)

*****Section P2902.5.3; change to read as follows:***

P2902.5.3 Lawn irrigation systems. The potable water supply to lawn irrigation systems shall be protected against backflow by an atmospheric-type vacuum breaker, a pressure-type vacuum breaker, a double-check assembly or a reduced pressure principle backflow preventer. A valve shall not be installed downstream from an atmospheric vacuum breaker. Where chemicals are introduced into the system, the potable water supply shall be protected against backflow by a reduced pressure principle backflow preventer.

(Reason: To provide clarity.)

*****Section P3009.9; change to read as follows:**

P3003.9. Solvent cementing. Joint surfaces shall be clean and free from moisture. A purple primer that conforms to ASTM F 656 shall be applied. Solvent cement not purple in color and conforming to ASTM D 2564, CSA B137.3, CSA B181.2 or CSA B182.1 shall be applied to all joint surfaces. The joint shall be made while the cement is wet and shall be in accordance with ASTM D 2855. Solvent cement joints shall be permitted above or below ground.

Exception: A primer is not required where both of the following conditions apply:

~~1. The solvent cement used is third-party certified as conforming to ASTM D 2564~~
~~2. The solvent cement is used only for joining PVC drain, waste, and vent pipe and fittings in not pressure applications in sizes up to and including 4 inches (102mm) in diameter.~~

(Reasoning: to keep the "process of joining PVC pipe)

*****Section P3111; delete.***

(Reason: A combination waste and vent system is not approved for use in residential construction.)

*****Section P3112.2; delete and replace with the following:***

P3112.2 Installation. Traps for island sinks and similar equipment shall be roughed in above the floor and may be vented by extending the vent as high as possible, but not less than the drainboard height and

then returning it downward and connecting it to the horizontal sink drain immediately downstream from the vertical fixture drain. The return vent shall be connected to the horizontal drain through a wye-branch fitting and shall, in addition, be provided with a foot vent taken off the vertical fixture vent by means of a wye-branch immediately below the floor and extending to the nearest partition and then through the roof to the open air or may be connected to other vents at a point not less than six (6) inches (152 mm) above the flood level rim of the fixtures served. Drainage fittings shall be used on all parts of the vent below the floor level and a minimum slope of one-quarter (1/4) inch per foot (20.9 mm/m) back to the drain shall be maintained. The return bend used under the drain-board shall be a one (1) piece fitting or an assembly of a forty-five (45) degree (0.79 radius), a ninety (90) degree (1.6 radius) and a forty-five (45) degree (0.79 radius) elbow in the order named. Pipe sizing shall be as elsewhere required in this Code. The island sink drain, upstream of the return vent, shall serve no other fixtures. An accessible cleanout shall be installed in the vertical portion of the foot vent.

(Reason: To clarify the installation of island venting and to provide a regional guideline on a standard installation method for this region.)

******Appendix Q Reserved. Amended to read as follows:***

Appendix Q. Swimming Pools, Spas and Hot Tubs.

SECTION AQ101 GENERAL

AQ101.1 General.
The provisions of this appendix shall control the design and construction of swimming pools, spas and hot tubs installed in or on the lot of a one- or two-family dwelling.

AQ101.2 Pools in flood hazard areas.
Pools that are located in flood hazard areas established by Table R301.2(1), including above-ground pools, on-ground pools and in-ground pools that involve placement of fill, shall comply with Section AQ101.2.1 or AQ101.2.2.

Exception: Pools located in riverine flood hazard areas which are outside of designated floodways.

AQ101.2.1 Pools located in designated floodways.
Where pools are located in designated floodways, documentation shall be submitted to the building official which demonstrates that the construction of the pool will not increase the design flood elevation at any point within the jurisdiction.

AQ101.2.2 Pools located where floodways have not been designated.
Where pools are located where design flood elevations are specified but floodways have not been designated, the applicant shall provide a floodway analysis that demonstrates that the proposed pool will not increase the design flood elevation more than 1 foot (305 mm) at any point within the jurisdiction.

SECTION AQ102 DEFINITIONS

AQ102.1 General.
For the purposes of these requirements, the terms used shall be defined as follows and as set forth in Chapter 2.

ABOVE-GROUND/ON-GROUND POOL. See "Swimming pool."

BARRIER. A fence, wall, building wall or combination thereof which completely surrounds the swimming pool and obstructs access to the swimming pool.

HOT TUB. See "Swimming pool."

IN-GROUND POOL. See "Swimming pool."

RESIDENTIAL. That which is situated on the premises of a detached one- or two-family dwelling, or a one-family townhouse not more than three stories in height.

SPA, NONPORTABLE. See "Swimming pool."

SPA, PORTABLE. A nonpermanent structure intended for recreational bathing, in which all controls, water-heating and water-circulating equipment are an integral part of the product.

SWIMMING POOL. Any structure intended for swimming or recreational bathing that contains water more than 24 inches (610 mm) deep. This includes in-ground, above-ground and on-ground swimming pools, hot tubs and spas.

SWIMMING POOL, INDOOR. A swimming pool which is totally contained within a structure and surrounded on all four sides by the walls of the enclosing structure.

SWIMMING POOL, OUTDOOR. Any swimming pool which is not an indoor pool.

SECTION AG103 SWIMMING POOLS

AQ103.1 In-ground pools.
In-ground pools shall be designed and constructed in compliance with ANSI/NSPI-5.

AQ103.2 Above-ground and on-ground pools.
Above-ground and on-ground pools shall be designed and constructed in compliance with ANSI/NSPI-4.

AQ103.3 Pools in flood hazard areas.
In flood hazard areas established by Table R301.2(1), pools in coastal high-hazard areas shall be designed and constructed in compliance with ASCE 24.

SECTION AQ104 SPAS AND HOT TUBS

AQ104.1 Permanently installed spas and hot tubs.
Permanently installed spas and hot tubs shall be designed and constructed in compliance with ANSI/NSPI-3.

AQ104.2 Portable spas and hot tubs.
Portable spas and hot tubs shall be designed and constructed in compliance with ANSI/NSPI-6.

SECTION AQ105 BARRIER REQUIREMENTS

AQ105.1 Application.
The provisions of this appendix shall control the design of barriers for residential swimming pools, spas and hot tubs. These design controls are intended to provide protection against potential drownings and near-drownings by restricting access to swimming pools, spas and hot tubs.

AQ105.2 Outdoor swimming pool. An outdoor swimming pool, including an in-ground, above-ground or on-ground pool, hot tub or spa shall be surrounded by a barrier which shall comply with the following:

1. The top of the barrier shall be at least 48 inches (1219mm) above grade measured on the side of the barrier, which faces away from the swimming pool. The maximum vertical clearance between grade and the bottom of the barrier shall be 2 inches (51mm) measured on the side of the barrier, which faces away from the swimming pool. Where the top of the pool structure is above grade, such as an above-ground pool, the barrier may be at ground level, such as the pool structure, or mounted on top of the pool structure. Where the barrier is mounted on top of the pool structure, the maximum vertical clearance between the top of the pool structure and the bottom of the barrier shall be 4 inches (102mm).

2. Openings in the barrier shall not allow passage of a 4-inch-diameter (102mm) sphere.

3. Solid barriers which do not have openings, such as a masonry or stone wall, shall not contain indentations or protrusions except for normal construction tolerances and tooled masonry joints.

4. Where the barrier is composed of horizontal and vertical members and the distance between the tops of the horizontal members is less than 45 inches (1143mm), the horizontal members shall be located on the swimming pool side of the fence. Spacing between vertical members shall not exceed 1.75 inches (44mm) in width. Where there are decorative cutouts within vertical members, spacing within the cutouts shall not exceed 1.75 inches (44 mm) in width.

5. Where the barrier is composed of horizontal and vertical members and the distance between the tops of the horizontal members is 45 inches (1143 mm) or more, spacing between vertical members shall not exceed 4 inches (102 mm). Where there are decorative cutouts within vertical members, spacing within the cutouts shall not exceed 1.75 inches (44 mm) in width.

6. Maximum mesh size for chain link fences shall be a 2.25-inch (57 mm) square unless the fence is provided with slats fastened at the top or the bottom which reduce the openings to not more than 1.75 inches (44 mm).

7. Where the barrier is composed of diagonal members, such as a lattice fence, the maximum opening formed by the diagonal members shall not be more than 1.75 inches (44 mm).

8. Access gates shall comply with the requirements of Section AQ105.2, Items 1 through 7, and shall be equipped to accommodate a locking device. Pedestrian access gates shall open outward away from the pool and shall be self-closing and have a self-latching device. Gates other than pedestrian access gates shall have a self-latching device. Where the release mechanism of the self-latching device is located less than 54 inches (1372 mm) from the bottom of the gate, the release mechanism and openings shall comply with the following:

8.1. The release mechanism shall be located on the pool side of the gate at least 3 inches (76 mm) below the top of the gate, and

8.2. The gate and barrier shall have not opening greater than 0.5 inch (13 mm) within 18 inches (457 mm) of the release mechanism.

9. Where a wall of a dwelling serves a part of the barrier one of the following conditions shall be met:

9.1. The pool shall be equipped with a powered safety cover in compliance with ASTM F1346; or

9.2. Doors with direct access to the pool through that wall shall be equipped with an alarm which produces an audible warning when the door and/or its screen, if present, are opened. The alarm shall be listed and labeled in accordance with UL 2017. The deactivation switch (es) shall be located at least 54 inches (1372 mm) above the threshold of the door; or

9.3. Other means of protection, such as self-closing doors with self-latching devices, which are approved by the governing body, shall be acceptable as long as the degree of protection afforded is not less than the protection afforded by Item 9.1 or 9.2 described above.

10. Where an above-ground pool structure is used as a barrier or where the barrier is mounted on top of the pool structure, and the means of access is a ladder or steps, then:

10.1. The ladder or steps shall be capable of being secured, locked or removed to prevent access, or

10.2. The ladder or steps shall be surrounded by a barrier which meets the requirements of Section AQ105.2, Items 1 through 9. When the ladder or steps are secured, locked or removed, any opening created shall not allow the passage of a 4-inchdiameter (102 mm) sphere.

AQ105.3 Indoor swimming pool. Walls surrounding an indoor swimming pool shall comply with Section AQ105.2, Item 9.

AQ105.4 Prohibited locations. Barriers shall be located so as to prohibit permanent structures, equipment or similar objects from being used to climb them.

AQ105.5 Barrier exceptions. Spas or hot tubs with a safety cover which complies with ASTM F 1346, as listed in Section AQ107, shall be exempt from the provisions of this appendix

SECTION AQ106 ENTRAPMENT PROTECTION FOR SWIMMING POOL AND SPA SUCTION OUTLETS

AQ106.1 General.
Suction outlets shall be designed and installed in accordance with ANSI/APSP-7.

SECTION AQ107 ABBREVIATIONS

AQ107.1 General.

ANSI—American National Standards Institute
11 West 42nd Street
New York, NY 10036

APSP—Association of Pool and Spa Professionals
NSPI—National Spa and Pool Institute
2111 Eisenhower Avenue
Alexandria, VA 22314

ASCE—American Society of Civil Engineers
1801 Alexander Bell Drive
Reston, VA 98411-0700

ASTM—ASTM International
100 Barr Harbor Drive
West Conshohocken, PA 19428

UL—Underwriters Laboratories, Inc.
333 Pfingsten Road
Northbrook, IL 60062-2096

SECTION AQ108 REFERENCED STANDARDS

AQ108.1 General.

ANSI/NSP

ANSI/NSPI-3—99	Standard for Permanently Installed Residential Spas	AQ104.1
ANSI/NSPI-4—99	Standard for Above-ground/ On-ground Residential Swimming Pools	AQ103.2
ANSI/NSPI-5—03	Standard for Residential In-ground Swimming Pools	AQ103.1
ANSI/NSPI-6—99	Standard for Residential Portable Spas	AQ104.2

ANSI/APSP

ANSI/APSP-7—06	Standard for Suction Entrapment Avoidance in Swimming Pools, Wading Pools, Spas, Hot Tubs and Catch Basins	AQ106.1

ASCE

ASCE/SEI-24—05	Flood-resistant Design and Construction	AQ103.3

ASTM

ASTM F 1346—91 (2003)	Performance Specification for Safety Covers and Labeling Requirements for All Covers for Swimming Pools Spas and Hot Tubs	AQ105.2, AQ105.5

UL

UL 2017—2000	Standard for General-purpose Signaling Devices and Systems—with revisions through June 2004	AQ105.2

(Reason: New Pool and Spa code not under review. In lieu of adoption of new pool code, previous edition of 2012 Appendix G is proposed for continued use but renamed 2015 Appendix Q.)

END

Recommended Amendments to the

2015 International Fire Code

North Central Texas Council of Governments Region

The following sections, paragraphs, and sentences of the *2015 International Fire Code* (IFC) are hereby amended as follows: Standard type is text from the IFC. Underlined type is text inserted. ~~Lined through type is deleted text from IFC.~~ A double asterisk (**) at the beginning of a section identifies an amendment carried over from the 2012 edition of the code and a triple asterisk (***) identifies a new or revised amendment with the 2015 code.

Note: Historically, the North Central Texas Council of Governments (NCTCOG) has limited Chapter 1 amendments in order to allow each city to insert their local policies and procedures. We now have suggested certain items to be brought to the attention of cities considering adoption of the code that may be of concern to several jurisdictions. **It is still intended to be discretionary to each city to determine which Chapter 1 amendments to include.** Note that Appendices must be specifically adopted by Ordinance. See Sample Ordinance on Page xii of 2015 IFC. Also, note that several sections of the code, as indicated in the Sample Ordinance, require jurisdictional specificity as to dollar amounts, geographic limits, etc.

Explanation of Options A and B:
Please note that as there is a wide range in fire fighting philosophies/capabilities of cities across the region, OPTIONS "A" and "B" are provided in the Fire and Building Code amendments. Jurisdictions should choose one of these based on their fire-fighting philosophies/capabilities when adopting code amendments.

*****Section 102.1; change #3 to read as follows:***

3. Existing structures, facilities, and conditions when required in Chapter 11 or in specific sections of this code.

(Reason: To clarify that there are other provisions in the fire code applicable to existing buildings that are not located in Chapter 11, such as Section 505 Premises Identification.)

*****Section 105.3.3; change to read as follows:***

105.3.3 Occupancy Prohibited before Approval. The building or structure shall not be occupied prior to the fire code official issuing a permit when required and conducting associated inspections indicating the applicable provisions of this code have been met.

(Reason: For clarity to allow for better understanding in areas not requiring such permits, such as unincorporated areas of counties. This amendment may be struck by a city.)

*****Section 105.7; add Section 105.7.19 to read as follows:***

105.7.19 Electronic access control systems. Construction permits are required for the installation or modification of an electronic access control system, as specified in Chapter 10. A separate construction permit is required for the installation or modification of a fire alarm system that may be connected to the access control system. Maintenance performed in accordance with this code is not considered a modification and does not require a permit.

(Reason: Adds construction permit requirements for electronic access control systems affecting access and/or egress to ensure proper design and installation of such systems. These changes reflect local practices of municipalities in this region.)

** **[B] AMBULATORY CARE FACILITY.** Buildings or portions thereof used to provide medical, surgical, psychiatric, nursing, or similar care on a less than 24-hour basis to persons who are rendered incapable of self-preservation by the services provided. This group may include but not be limited to the following:

- Dialysis centers

- Procedures involving sedation

- Sedation dentistry

- Surgery centers

- Colonic centers

- Psychiatric centers

(Reason: to clarify the range of uses included in the definition)

** **[B] ATRIUM.** An opening connecting ~~two~~ three or more stories… *{remaining text unchanged}*

(Reason: Accepted practice in the region based on legacy codes. IBC Section 1009 permits unenclosed two story stairways under certain circumstances.)

*** **[B] DEFEND IN PLACE.** A method of emergency response that engages building components and trained staff to provide occupant safety during an emergency. Emergency response involves remaining in place, relocating within the building, or both, without evacuating the building.

(*Reason: Added from International Building Code (IBC) definitions for consistency in interpretation of the subject requirements pertaining to such occupancies.)*

****FIRE WATCH.** A temporary measure intended to ensure continuous and systematic surveillance of a building or portion thereof by one or more qualified individuals or standby personnel when required by the *fire code official*, for the purposes of identifying and controlling fire hazards, detecting early signs of unwanted fire, raising an alarm of fire and notifying the fire department.

(Reason: Clearly defines options to the fire department for providing a fire watch.)

****FIREWORKS.** Any composition or device for the purpose of producing a visible or an audible effect for entertainment purposes by combustion, *deflagration*, ~~or~~ *detonation*, and/or activated by ignition with a match or other heat producing device that meets the definition of 1.4G fireworks or 1.3G fireworks as set forth herein. *… {remainder of text unchanged}…*

(Reason: Increased safety from fireworks related injuries.)

****Option A**

HIGH-PILED COMBUSTIBLE STORAGE: add a second paragraph to read as follows:

Any building classified as a group S Occupancy or Speculative Building exceeding 12,000 sq. ft. that has a clear height in excess of 14 feet, making it possible to be used for storage in excess of 12 feet, shall be considered to be high-piled storage. When a specific product cannot be identified, a fire protection system and life safety features shall be installed as for Class IV commodities, to the maximum pile height.

Option B
HIGH-PILED COMBUSTIBLE STORAGE: add a second paragraph to read as follows:

Any building classified as a group S Occupancy or Speculative Building exceeding 6,000 sq. ft. that has a clear height in excess of 14 feet, making it possible to be used for storage in excess of 12 feet, shall be considered to be high-piled storage. When a specific product cannot be identified, a fire protection system and life safety features shall be installed as for Class IV commodities, to the maximum pile height.

(Reason: To provide protection for worst-case scenario in flexible or unknown situations.)

****Option A**

HIGH-RISE BUILDING. {No Change Required}

****Option B**

HIGH-RISE BUILDING. A building with an occupied floor located more than ~~75~~ 55 feet (~~22 860~~ 16 764 mm) above the lowest level of fire department vehicle access.

(Reason: Allows for additional construction safety features to be provided, based on firefighting response capabilities.)

****REPAIR GARAGE**. A building, structure or portion thereof used for servicing or repairing motor vehicles. This occupancy shall also include garages involved in minor repair, modification and servicing of motor vehicles for items such as lube changes, inspections, windshield repair or replacement, shocks, minor part replacement, and other such minor repairs.

(Reason: To further clarify types of service work allowed in a repair garage, as well as to correspond with definition in the IBC.)

****SELF-SERVICE STORAGE FACILITY.** Real property designed and used for the purpose of renting or leasing individual storage spaces to customers for the purpose of storing and removing personal property on a self-service basis.

(Reason: To provide a definition that does not exist in the code.)

****STANDBY PERSONNEL.** Qualified fire service personnel, approved by the Fire Chief. When utilized, the number required shall be as directed by the Fire Chief. Charges for utilization shall be as normally calculated by the jurisdiction.

*****UPGRADED OR REPLACED FIRE ALARM SYSTEM.** A fire alarm system that is upgraded or replaced includes, but is not limited to the following:

- Replacing one single board or fire alarm control unit component with a newer model
- Installing a new fire alarm control unit in addition to or in place of an existing one
- Conversion from a horn system to an emergency voice/alarm communication system
- Conversion from a conventional system to one that utilizes addressable or analog devices

The following are not considered an upgrade or replacement:

- Firmware updates
- Software updates
- Replacing boards of the same model with chips utilizing the same or newer firmware

(Reason: This is referenced in several places, but the wording of "upgraded or replaced" is somewhat ambiguous and open to interpretation. Defining it here allows for consistent application across the

region.)

*****Section 307.1.1; change to read as follows:***

307.1.1 Prohibited Open Burning. Open burning ~~shall be prohibited~~ that is offensive or objectionable because of smoke emissions or when atmospheric conditions or local circumstances make such fires hazardous shall be prohibited.

Exception: {No change.}

(Reason: To further protect adjacent property owners/occupants from open burning and/or smoke emissions from open burning.)

*****Section 307.2; change to read as follows:***

307.2 Permit Required. A permit shall be obtained from the *fire code official* in accordance with Section 105.6 prior to kindling a fire for recognized silvicultural or range or wildlife management practices, prevention or control of disease or pests, or open burning ~~a bonfire~~. Application for such approval shall only be presented by and permits issued to the owner of the land upon which the fire is to be kindled.

Examples of state or local law, or regulations referenced elsewhere in this section may include but not be limited to the following:

1. Texas Commission on Environmental Quality (TCEQ) guidelines and/or restrictions.
2. State, County, or Local temporary or permanent bans on open burning.
3. Local written policies as established by the *fire code official*.

(Reason: Amendments to 307.2, 307.4, 307.4.3, and 307.5 better explain current requirements and recognize that jurisdictions have local established policies that best fit their environments.)

*****Section 307.3; change to read as follows:***

307.3 Extinguishment Authority. ~~When open burning creates or adds to a hazardous situation, or a required permit for open burning has not been obtained, the fire code official is authorized to order the extinguishment of the open burning operation.~~ The fire code official is authorized to order the extinguishment by the permit holder, another person responsible or the fire department of open burning that creates or adds to a hazardous or objectionable situation.

(Reason: Provides direction as to responsible parties relative to extinguishment of the subject open burning.)

*****Section 307.4; change to read as follows:***

307.4 Location. The location for open burning shall not be less than ~~50~~ 300 feet (~~15 240~~ 91 440 mm) from any structure, and provisions shall be made to prevent the fire from spreading to within ~~50~~ 300 feet (~~15 240~~ 91 440 mm) of any structure.

Exceptions: {No change.}

(*Reason: To increase the separation distance thereby increasing the safety to adjacent properties, as per applicable TCEQ rules and regulations regarding outdoor burning.)*

*****Section 307.4.3, Exceptions: add exception #2 to read as follows:***

Exceptions:

2. Where buildings, balconies and decks are protected by an approved automatic sprinkler system.

(Reason: To reflect similar allowances for open-flame cooking in these same locations.)

*****Section 307.4.4 and 5; add section 307.4.4 and 307.4.5 to read as follows:***

307.4.4 Permanent Outdoor Firepit. Permanently installed outdoor firepits for recreational fire purposes shall not be installed within 10 feet of a structure or combustible material.

Exception: Permanently installed outdoor fireplaces constructed in accordance with the International Building Code.

307.4.5 Trench Burns. Trench burns shall be conducted in air curtain trenches and in accordance with Section 307.2.

(Reason: To provide a greater level of safety for this potentially hazardous fire exposure condition. Decrease in separation distance allowed for outdoor firepits due to permanent nature of construction having substantial securement.)

*****Section 307.5; change to read as follows:***

307.5 Attendance. *Open burning*, trench burns, bonfires, *recreational fires*, and use of portable outdoor fireplaces shall be constantly attended until the… *{Remainder of section unchanged}*

(Reason: Adds attendance for trench burns based on previous amendment provision for such.)

*****Section 308.1.4; change to read as follows:***

308.1.4 Open-flame Cooking Devices. ~~Charcoal burners and other o~~Open-flame cooking devices, charcoal grills and other similar devices used for cooking shall not be ~~operated~~ located or used on combustible balconies, decks, or within 10 feet (3048 mm) of combustible construction.

Exceptions:

1. One- and two-family dwellings, except that LP-gas containers are limited to a water capacity not greater than 50 pounds (22.68 kg) [nominal 20 pound (9.08 kg) LP-gas capacity] with an aggregate LP-gas capacity not to exceed 100 lbs (5 containers).

2. Where buildings, balconies and decks are protected by an approved *automatic sprinkler system*, except that LP-gas containers are limited to a water capacity not greater than 50 pounds (22.68 kg) [nominal 20 pound (9.08 kg) LP-gas capacity], with an aggregate LP-gas capacity not to exceed 40 lbs (2 containers).

3. {No change.}

(Reason: Decrease fire risk in multi-family dwellings and minimizes ignition sources and clarify allowable limits for 1 & 2 family dwellings, and allow an expansion for sprinklered multi-family uses. This amendment adds clarification and defines the container size allowed for residences.)

*****Section 308.1.6.2, Exception #3; change to read as follows:***

Exceptions:

3. Torches or flame-producing devices in accordance with Section ~~308.~~4 308.1.3.

(Reason: Section identified in published code is inappropriate.)

******Section 308.1.6.3; change to read as follows:***

308.1.6.3 Sky Lanterns. A person shall not release or cause to be released an ~~untethered~~ unmanned free-floating devices containing an open flame or other heat source, such as but not limited to a sky lantern.

(Reason: Eliminates the potential fire hazard presented by utilization of such devices and the potential accidental release of such devices.)

*****Section 311.5; change to read as follows:***

311.5 Placards. ~~Any~~ The *fire code official* is authorized to require marking of any vacant or abandoned buildings or structures determined to be unsafe pursuant to Section 110 of this code relating to structural or interior hazards, ~~shall be marked~~ as required by Section 311.5.1 through 311.5.5.

(Reason: There may be situations where placarding is not desired or necessary; also clarifies intent that it is not the fire code official's responsibility to provide the placard.)

****{Note that prior amendment to Section 401.9 in the 2012 IFC recommended amendments has been relocated to Section 901.6.3 as a more appropriate location for the requirement.}*

******Section 403.5; change Section 403.5 to read as follows:***

403.5 Group E Occupancies. An approved fire safety and evacuation plan in accordance with Section 404 shall be prepared and maintained for Group E occupancies and for buildings containing both a Group E occupancy and an atrium. A diagram depicting two evacuation routes shall be posted in a conspicuous location in each classroom. Group E occupancies shall also comply with Sections 403.5.1 through 403.5.3.

(Reason: The diagrams are intended to assist with egress in such occupancies – specifically, the primary teacher is not always present to assist children with egress. Also, such will help reinforce evacuation drill requirements.)

******Section 404.2.2; add Number 4.10 to read as follows:***

4.10 Fire extinguishing system controls.

(Reason: The committee believed this information could be of great help to such plans to facilitate locating sprinkler valves to minimize water damage, for instance.)

******Section 405.4; change Section 405.4 to read as follows:***

405.4 Time. The fire code official may require an evacuation drill at any time. Drills shall be held at unexpected times and under varying conditions to simulate the unusual conditions that occur in case of fire.

(Reason: This change clarifies who may require a fire or evacuation drill).

*****Section 501.4; change to read as follows:***

501.4 Timing of Installation. When fire apparatus access roads or a water supply for fire protection is required to be installed for any structure or development, they shall be installed, tested, and approved prior to the time of which construction has progressed beyond completion of the foundation of any structure. ~~, such protection shall be installed and made serviceable prior to and during the time of construction except when approved alternative methods of protection are provided. Temporary street signs shall be installed at each street intersection when construction of new roadways allows passage by vehicles in accordance with Section 505.2.~~

(Reason: Reflects current practice in the region relative to ensuring fire department and EMS access during construction, which can be a time of increased frequency for emergency incidents.)

*****Section 503.1.1; add sentence to read as follows:***

Except for one- or two-family dwellings, the path of measurement shall be along a minimum of a ten feet (10') wide unobstructed pathway around the external walls of the structure.

(Reason: Recognizes that the hose lay provision can only be measured along a pathway that is wide enough for fire fighter access.)

*****Section 503.2.1; change to read as follows:***

503.2.1 Dimensions. Fire apparatus access roads shall have an unobstructed width of not less than ~~20~~ 24 feet (~~6096 mm~~ 7315 mm), exclusive of shoulders, except for approved security gates in accordance with Section 503.6, and an unobstructed vertical clearance of not less than ~~13 feet 6 inches (4115 mm)~~ 14 feet (4267 mm).

> **Exception:** Vertical clearance may be reduced; provided such reduction does not impair access by fire apparatus and *approved* signs are installed and maintained indicating the established vertical clearance when approved.

(Reason: Amendments to 503.2.1 and 503.2.2 recognize that the equipment now used in firefighting is increasing in size. The code already recognizes that larger dimensions may be required under Section 503.2.2. The amendments are to standardize the dimensions for this area. With the increase in fire apparatus size, this will allow for the passage of two fire apparatus during a fire or EMS emergency.)

*****Section 503.2.2; change to read as follows:***

503.2.2 Authority. The *fire code official* shall have the authority to require an increase in the minimum access widths and vertical clearances where they are inadequate for fire or rescue operations.

(Reason: Amendments to 503.2.1 and 503.2.2 recognize that the equipment now used in firefighting is increasing in size. The code already recognizes that larger dimensions may be required under Section 503.2.2. The amendments are to standardize the dimensions for this area. With the increase in fire apparatus size, this will allow for the passage of two fire apparatus during a fire or EMS emergency.)

******Section 503.2.3; change Section 503.2.3 to read as follows:***

503.2.3 Surface. Fire apparatus access roads shall be designed and maintained to support imposed loads of 80,000 Lbs for fire apparatus and shall be surfaced so as to provide all-weather driving capabilities.

(Reason: To address the current size of fire trucks in use – figure derived from DOT requirements for waiver of vehicle exceeding such weight.)

*****Section 503.3; change to read as follows:***

503.3 Marking. ~~Where required by the fire code official, approved signs or other approved notices or markings that include the words NO PARKING – FIRE LANE~~ Striping, signs, or other markings, when approved by the *fire code official*, shall be provided for fire apparatus access roads to identify such roads or prohibit the obstruction thereof. ~~The means by which fire lanes are designated~~ Striping, signs and other markings shall be maintained in a clean and legible condition at all times and be replaced or repaired when necessary to provide adequate visibility.

> **(1) Striping** – Fire apparatus access roads shall be continuously marked by painted lines of red traffic paint six inches (6") in width to show the boundaries of the lane. The words "NO PARKING FIRE LANE" or "FIRE LANE NO PARKING" shall appear in four inch (4") white letters at 25 feet intervals on

the red border markings along both sides of the fire lanes. Where a curb is available, the striping shall be on the vertical face of the curb.

(2) Signs – Signs shall read "NO PARKING FIRE LANE" or "FIRE LANE NO PARKING" and shall be 12" wide and 18" high. Signs shall be painted on a white background with letters and borders in red, using not less than 2" lettering. Signs shall be permanently affixed to a stationary post and the bottom of the sign shall be six feet, six inches (6'6") above finished grade. Signs shall be spaced not more than fifty feet (50') apart along both sides of the fire lane. Signs may be installed on permanent buildings or walls or as approved by the Fire Chief.

(Reason: Establishes a standard method of marking and reflects local long-standing practices.)

*****Section 503.4; change to read as follows:***

503.4 Obstruction of Fire Apparatus Access Roads. Fire apparatus access roads shall not be obstructed in any manner, including the parking of vehicles. The minimum widths and clearances established in Section 503.2.1 and any area marked as a fire lane as described in Section 503.3 shall be maintained at all times.

(Reason: As originally worded, the section implied that vehicles could be parked in the marked fire lane and not be in violation if the minimum width is still maintained. Current accepted enforcement practice is to require the entire marked fire lane to be maintained clear and unobstructed.)

*****Section 505.1; change to read as follows:***

505.1 Address Identification. New and existing buildings shall be provided with approved address identification. The address identification shall be legible and placed in a position that is visible from the street or road fronting the property. Address identification characters shall contrast with their background. Address numbers shall be Arabic numbers or alphabetical letters. Numbers shall not be spelled out. Each character shall be not less than ~~4 inches (102 mm)~~ 6 inches (152.4 mm) high with a minimum stroke width of 1/2 inch (12.7 mm). Where required by the fire code official, address numbers shall be provided in additional approved locations to facilitate emergency response. Where access is by means of a private road, buildings do not immediately front a street, and/or the building cannot be viewed from the public way, a monument, pole or other sign with approved 6 inch (152.4 mm) height building numerals or addresses and 4 inch (101.6 mm) height suite/apartment numerals of a color contrasting with the background of the building or other approved means shall be used to identify the structure. Numerals or addresses shall be posted on a minimum 20 inch (508 mm) by 30 inch (762 mm) background on border. Address identification shall be maintained.

> **Exception:** R-3 Single Family occupancies shall have approved numerals of a minimum 3 ½ inches (88.9 mm) in height and a color contrasting with the background clearly visible and legible from the street fronting the property and rear alleyway where such alleyway exists.

(Reason: To increase the minimum addressing requirements for commercial properties and establish a minimum for single-family residential properties Such improves legibility of these signs which are critical to emergency response in a more timely manner.)

*****Section 507.4; change to read as follows:***

507.4 Water Supply Test Date and Information. The water supply test used for hydraulic calculation of fire protection systems shall be conducted in accordance with NFPA 291 "Recommended Practice for Fire Flow Testing and Marking of Hydrants" and within one year of sprinkler plan submittal. The *fire code official* shall be notified prior to the water supply test. Water supply tests shall be witnessed by the *fire code official*, as required ~~or approved documentation of the test shall be provided to the *fire code official* prior to final approval of the water supply system~~. The exact location of the static/residual hydrant and the flow hydrant shall be indicated on the design drawings. All fire protection plan submittals shall be

accompanied by a hard copy of the waterflow test report, or as approved by the *fire code official*. The report must indicate the dominant water tank level at the time of the test and the maximum and minimum operating levels of the tank, as well, or identify applicable water supply fluctuation. The licensed contractor must then design the fire protection system based on this fluctuation information, as per the applicable referenced NFPA standard. Reference Section 903.3.5 for additional design requirements.

(Reason: Clarifies intent of the test to ensure contractor accounts for water supply fluctuations.)

*****Section 507.5.4; change to read as follows:***

507.5.4 Obstruction. Unobstructed access to fire hydrants shall be maintained at all times. Posts, fences, vehicles, growth, trash, storage and other materials or objects shall not be placed or kept near fire hydrants, fire department inlet connections or fire protection system control valves in a manner that would prevent such equipment or fire hydrants from being immediately discernible. The fire department shall not be deterred or hindered from gaining immediate access to fire protection equipment or fire hydrants.

(Reason: Maintains wording from 2006 Code to ensure these critical devices are available in an emergency incident.)

*****Section 509.1.2; add new Section 509.1.2 to read as follows:***

509.1.2 Sign Requirements. Unless more stringent requirements apply, lettering for signs required by this section shall have a minimum height of 2 inches (50.8 mm) when located inside a building and 4 inches (101.6 mm) when located outside, or as approved by the *fire code official*. The letters shall be of a color that contrasts with the background.

(Reason: Provides direction as to appropriate sign criteria to develop consistency in this regard.)

*****Section 603.3.2.1, Exception; change exception to read as follows:***

Exception: The aggregate capacity limit shall be permitted to be increased to 3,000 gallons (11,356 L) in accordance with all requirements of Chapter 57. ~~of Class II or III liquid for storage in protected above-ground tanks~~... *{Delete remainder of Exception}*

(Reason: Change to Section 5704.2.9.5 is included in this amendment package.)

*****Section 603.3.2.2; change to read as follows:***

603.3.2.2 Restricted Use and Connection. Tanks installed in accordance with Section 603.3.2 shall be used only to supply fuel oil to fuel-burning ~~or generator~~ equipment installed in accordance with Section 603.3.2.4. Connections between tanks and equipment supplied by such tanks shall be made using closed piping systems.

(Reason: Relocate the exception to Chapter 57 for applicability to generator sets, due to contradictory charging statement in 603.1 to not apply to internal combustion engines. Further, such large quantities of combustible liquid are more thoroughly addressed in Chapter 57 relative to such tanks.)

******Section 604; change and add to read as follows:***

604.1.1 Stationary Generators. Stationary emergency and standby power generators required by this code shall be *listed* in accordance with UL 2200.
604.1.2 Installation. Emergency power systems and standby power systems shall be installed in accordance with the *International Building Code*, NFPA 70, NFPA 110 and NFPA 111. Existing installations shall be maintained in accordance with the original approval, except as specified in Chapter 11.
604.1.3 through 604.1.8 {No changes to these sections.}
604.1.9 Critical Operations Power Systems (COPS). For Critical Operations Power Systems

necessary to maintain continuous power supply to facilities or parts of facilities that require continuous operation for the reasons of public safety, emergency management, national security, or business continuity, see NFPA 70.

604.2 Where Required. Emergency and standby power systems shall be provided where required by Sections 604.2.1 through ~~604.2.16~~ 604.2.24 or elsewhere identified in this code or any other referenced code.

604.2.1 through 604.2.3 {No change.}

604.2.4 ~~Group A occupancies.~~ Emergency Voice/alarm Communications Systems. Emergency power shall be provided for emergency voice/alarm communications systems in the following occupancies, or as specified elsewhere in this code, as required in Section 907.5.2.2.5. The system shall be capable of powering the required load for a duration of not less than 24 hours, as required in NFPA 72.

Covered and Open Malls, Section 907.2.20 and 914.2.3
Group A Occupancies, Sections 907.2.1 and 907.5.2.2.4.
Special Amusement Buildings, Section 907.2.12.3
High-rise Buildings, Section 907.2.13
Atriums, Section 907.2.14
Deep Underground Buildings, Section 907.2.19

604.2.5 through 604.2.11 {No change.}

604.2.12 Means of Egress Illumination. Emergency power shall be provided for *means of egress* illumination in accordance with Sections 1008.3 and 1104.5.1. (90 minutes)

604.2.13 Membrane Structures. Emergency power shall be provided for *exit* signs in temporary tents and membrane structures in accordance with Section 3103.12.6.1. (90 minutes) Standby power shall be provided for auxiliary inflation systems in permanent membrane structures in accordance with Section 2702 of the *International Building Code*. (4 hours) Auxiliary inflation systems shall be provided in temporary air-supported and air-inflated membrane structures in accordance with section 3103.10.4.

604.2.14 {No change.}

604.2.15 Smoke Control Systems. Standby power shall be provided for smoke control systems in the following occupancies, or as specified elsewhere in this code, as required in Section 909.11:

Covered Mall Building, *International Building Code*, Section 402.7
Atriums, *International Building Code*, Section 404.7
Underground Buildings, *International Building Code*, Section 405.8
Group I-3, *International Building Code*, Section 408.4.2
Stages, *International Building Code*, Section 410.3.7.2
Special Amusement Buildings (as applicable to Group A's), *International Building Code*, Section 411.1
Smoke Protected Seating, Section 1029.6.2.1

604.2.17 Covered and Open Mall Buildings. Emergency power shall be provided in accordance with Section 907.2.20 and 914.2.3.

604.2.18 Airport Traffic Control Towers. A standby power system shall be provided in airport traffic control towers more than 65 ft. in height. Power shall be provided to the following equipment:

1. Pressurization equipment, mechanical equipment and lighting.
2. Elevator operating equipment.
3. Fire alarm and smoke detection systems.

604.2.19 Smokeproof Enclosures and Stair Pressurization Alternative. Standby power shall be provided for smokeproof enclosures, stair pressurization alternative and associated automatic fire detection systems as required by the *International Building Code*, Section 909.20.6.2.

604.2.20 Elevator Pressurization. Standby power shall be provided for elevator pressurization system as required by the *International Building Code*, Section 909.21.5.

604.2.21 Elimination of Smoke Dampers in Shaft Penetrations. Standby power shall be provided when eliminating the smoke dampers in ducts penetrating shafts in accordance with the *International Building Code*, Section 717.5.3, exception 2.3.

604.2.22 Common Exhaust Systems for Clothes Dryers. Standby power shall be provided for common exhaust systems for clothes dryers located in multistory structures in accordance with the *International Mechanical Code,* Section 504.10, Item 7.

604.2.23 Hydrogen Cutoff Rooms. Standby power shall be provided for mechanical ventilation and gas detection systems of Hydrogen Cutoff Rooms in accordance with the *International Building Code*, Section

421.8.
604.2.24 Means of Egress Illumination in Existing Buildings. Emergency power shall be provided for *means of egress* illumination in accordance with Section 1104.5 when required by the fire code official. (90 minutes in I-2, 60 minutes elsewhere.)
604.3 through 604.7 {No change.}
604.8 Energy Time Duration. Unless a time limit is specified by the fire code official, in this chapter or elsewhere in this code, or in any other referenced code or standard, the emergency and standby power system shall be supplied with enough fuel or energy storage capacity for not less than 2-hour full-demand operation of the system.

Exception: Where the system is supplied with natural gas from a utility provider and is approved.

(Reason: These provisions provide a list to complete and match that throughout the codes. The only new items are the reference to COPS in NFPA 70, and the specified Energy time duration. Other changes are a reference to a code provision that already exists.)

******Section 609.2; change to read as follows:***

609.2 Where Required. A Type I hood shall be installed at or above all commercial cooking appliances and domestic cooking appliances used for commercial purposes that produce grease vapors, including but not limited to cooking equipment used in fixed, mobile, or temporary concessions, such as trucks, buses, trailers, pavilions, or any form of roofed enclosure, as required by the fire code official.

Exceptions:

1. Tents, as provided for in Chapter 31.
2. {No change to existing Exception.}

Additionally, fuel gas and power provided for such cooking appliances shall be interlocked with the extinguishing system, as required by Section 904.12.2. Fuel gas containers and piping/hose shall be properly maintained in good working order and in accordance with all applicable regulations.

(Reason: To require fire protection and prevention for mobile food trucks and other mobile commercial cooking operations for the protection of occupants and first responders, including the fuel gas utilized for the cooking operation.)

*****Section 704.1; change to read as follows:***

704.1 Enclosure. Interior vertical shafts including, but not limited to, *stairways*, elevator hoistways, service and utility shafts, that connect two or more stories of a building shall be enclosed or protected in accordance with the codes in effect at the time of construction but, regardless of when constructed, not less than as required in Chapter 11. New floor openings in existing buildings shall comply with the *International Building Code.*

(Reason: Provides standard minimum protection retroactively, but clarifies that this section is not to be used to reduce higher protection levels that were required when originally constructed.)

******Section 807.3; change to read as follows:***

807.3 Combustible Decorative Materials. ~~In other than Group I-3~~ In occupancies in Groups A, E, I, and R-1, and dormitories in Group R-2, curtains, draperies, fabric hangings and other similar combustible decorative materials suspended from walls or ceilings shall comply with Section 807.4 and shall not exceed 10 percent of the specific wall or ceiling area to which they are attached.

(Reason: Section 807 was re-arranged and modified from the 2012 IFC: previously, curtains were required to be NFPA 701 compliant and limited to 10 percent of the applicable wall in A, E, I, R-1, and R-2 dormitory occupancies, but now, per the published 2015 IFC, Section 807.3 would apply to all occupancies, except I-3 (non-combustible only). Such a change is a tremendous expansion of the requirement, and no justification was provided in the proposed code change at the code hearings as to

the reasons for such an expansion of the requirement, especially considering that it also applies to existing buildings. The board believes that this change is an over-reach for such a stringent requirement and that maintenance of the legacy language is appropriate at this time.)

*****Section 807.5.2.2 and 807.5.2.3; change to read as follows:***

807.5.2.2 Artwork in Corridors. Artwork and teaching materials shall be limited on the walls of corridors to not more than 20 percent of the wall area. Such materials shall not be continuous from floor to ceiling or wall to wall. Curtains, draperies, wall hangings, and other decorative material suspended from the walls or ceilings shall meet the flame propagation performance criteria of NFPA 701 in accordance with Section 807 or be noncombustible.

Exception: Corridors protected by an approved automatic sprinkler system installed in accordance with Section 903.3.1.1 shall be limited to 50 percent of the wall area.

807.5.2.3 Artwork in Classrooms. Artwork and teaching materials shall be limited on walls of classrooms to not more than 50 percent of the specific wall area to which they are attached.
Curtains, draperies, wall hangings and other decorative material suspended from the walls or ceilings shall meet the flame propagation performance criteria of NFPA 701 in accordance with Section 807 or be noncombustible.

(Reason: This change allows an increase in wall coverage due to the presence of sprinklers. Also provides additional guidance relative to fire resistance requirements in these areas.)

*****Section 807.5.5.2 and 807.5.5.3; change to read as follows:***

807.5.5.2 Artwork in Corridors. Artwork and teaching materials shall be limited on the walls of corridors to not more than 20 percent of the wall area. Such materials shall not be continuous from floor to ceiling or wall to wall. Curtains, draperies, wall hangings and other decorative material suspended from the walls or ceilings shall meet the flame propagation performance criteria of NFPA 701 in accordance with Section 807 or be noncombustible.

Exception: Corridors protected by an approved automatic sprinkler system installed in accordance with Section 903.3.1.1 shall be limited to 50 percent of the wall area.

807.5.5.3 Artwork in Classrooms. Artwork and teaching materials shall be limited on walls of classrooms to not more than 50 percent of the specific wall area to which they are attached. Curtains, draperies, wall hangings and other decorative material suspended from the walls or ceilings shall meet the flame propagation performance criteria of NFPA 701 in accordance with Section 807 or be noncombustible.

(Reason: This change allows an increase in wall coverage due to the presence of sprinklers. Also provides additional guidance relative to fire resistance requirements in these areas.)

*****Section 901.6.1; add Section 901.6.1.1 to read as follows:***

901.6.1.1 Standpipe Testing. Building owners/managers must maintain and test standpipe systems as per NFPA 25 requirements. The following additional requirements shall be applied to the testing that is required every 5 years:

10. The piping between the Fire Department Connection (FDC) and the standpipe shall be backflushed when foreign material is present, and also hydrostatically tested for all FDC's on any type of standpipe system. Hydrostatic testing shall also be conducted in accordance with NFPA 25 requirements for the different types of standpipe systems.

11. For any manual (dry or wet) standpipe system not having an automatic water supply capable of flowing water through the standpipe, the tester shall connect hose from a fire hydrant or portable pumping system (as approved by the *fire code official*) to each FDC, and flow water through the standpipe system to the roof outlet to verify that each inlet connection functions properly. Confirm

that there are no open hose valves prior to introducing water into a dry standpipe. There is no required pressure criteria at the outlet. Verify that check valves function properly and that there are no closed control valves on the system.

12. Any pressure relief, reducing, or control valves shall be tested in accordance with the requirements of NFPA 25. All hose valves shall be exercised.

13. If the FDC is not already provided with approved caps, the contractor shall install such caps for all FDC's as required by the *fire code official*.

14. Upon successful completion of standpipe test, place a blue tag (as per Texas Administrative Code, Fire Sprinkler Rules for Inspection, Test and Maintenance Service (ITM) Tag) at the bottom of each standpipe riser in the building. The tag shall be check-marked as "Fifth Year" for Type of ITM, and the note on the back of the tag shall read "5 Year Standpipe Test" at a minimum.

15. The procedures required by Texas Administrative Code Fire Sprinkler Rules with regard to Yellow Tags and Red Tags or any deficiencies noted during the testing, including the required notification of the local Authority Having Jurisdiction (*fire code official*) shall be followed.

16. Additionally, records of the testing shall be maintained by the owner and contractor, if applicable, as required by the State Rules mentioned above and NFPA 25.

17. Standpipe system tests where water will be flowed external to the building shall not be conducted during freezing conditions or during the day prior to expected night time freezing conditions.

18. Contact the *fire code official* for requests to remove existing fire hose from Class II and III standpipe systems where employees are not trained in the utilization of this firefighting equipment. All standpipe hose valves must remain in place and be provided with an approved cap and chain when approval is given to remove hose by the *fire code official*.

(Reason: Increases the reliability of the fire protection system and re-emphasizes the requirements of NFPA 25 relative to standpipe systems, as well as ensuring that FDC connections are similarly tested/maintained to ensure operation in an emergency incident.)

*****Section 901.6.3; add Section 901.6.3 to read as follows:***

901.6.3 False Alarms and Nuisance Alarms. False alarms and nuisance alarms shall not be given, signaled or transmitted or caused or permitted to be given, signaled or transmitted in any manner.

(Reason: Places the responsibility on the business or property owner to maintain their fire alarm systems in approved condition. Allows the enforcement of "prohibition of false alarms". Replaces text lost from the legacy codes that helps to ensure the maintenance of life safety systems.)

*****Section 901.7; change to read as follows:***

901.7 Systems Out of Service. Where a required *fire protection system* is out of service or in the event of an excessive number of activations, the fire department and the *fire code official* shall be notified immediately and, where required by the *fire code official*, the building shall either be evacuated or an *approved fire watch* shall be provided for all occupants left unprotected by the shut down until the *fire protection system* has been returned to service. *… {remaining text unchanged}*

(Reason: Gives fire code official more discretion with regards to enforcement of facilities experiencing nuisance alarm or fire protection system activations necessitating correction/repair/replacement. The intent of the amendment is to allow local jurisdictions to enforce fire watches, etc., where needed to ensure safety of occupants where fire protection systems are experiencing multiple nuisance activations.

Section 901.8.2; change to read as follows:

901.8.2 Removal of ~~existing~~ Occupant-use Hose Lines. The *fire code official* is authorized to permit the removal of ~~existing~~ occupant-use hose lines and hose valves where all of the following conditions exist:

1. ~~Installation is not required by this code or the *International Building Code*.~~
2. The hose line(s) would not be utilized by trained personnel or the fire department.
3. ~~T~~ If the ~~remaining outlets~~ occupant-use hose lines are removed, but the hose valves are required to remain as per the fire code official, such shall be ~~are~~ compatible with local fire department fittings.

(Reason: Occupant-use hose lines have been an issue of concern that fire code officials have struggled with for many years now, primarily in that they are required by the published code, even though occupants are rarely properly trained in their use or provided with the OSHA-required protective gear for such use, such as with an industrial fire brigade. The allowance for these hose lines to remain only promotes the possibility of an occupant attempting to fight fire for an unknown duration, rather than evacuate, and potentially injure themselves or others through such action. They present greater risk than benefit to the occupants, and as such, the above gives the fire code official the authorization to allow removal of such at his or her discretion.)

Section 903.1.1; change to read as follows:*

903.1.1 Alternative Protection. Alternative automatic fire-extinguishing systems complying with Section 904 shall be permitted ~~instead of~~ in addition to automatic sprinkler protection where recognized by the applicable standard ~~and~~, or as *approved* by the *fire code official*.

(Reason: Such alternative systems do not provide the reliability of automatic sprinkler protection. Most gaseous type systems are highly susceptible to open doors, ceiling or floor tile removal, etc. However, an applicant could pursue an Alternate Method request to help mitigate the reliability issues with these alternative systems with the fire code official if so desired, or there may be circumstances in which the fire code official is acceptable to allowing an alternate system in lieu of sprinklers, such as kitchen hoods or paint booths.)

Section 903.2; add paragraph to read as follows:*

Automatic Sprinklers shall not be installed in elevator machine rooms, elevator machine spaces, and elevator hoistways, other than pits where such sprinklers would not necessitate shunt trip requirements under any circumstances. Storage shall not be allowed within the elevator machine room. Signage shall be provided at the entry doors to the elevator machine room indicating "ELEVATOR MACHINERY – NO STORAGE ALLOWED."

(Reason: Firefighter and public safety. This amendment eliminates the shunt trip requirement of the International Building Code Section 3006.5 for the purpose of elevator passenger and firefighter safety. This amendment is contingent on the Building Code amendment eliminating the Exceptions to Section 3006.4, such that passive fire barriers for these areas are maintained.)

Section 903.2; delete the exception.*

(Reason: The exception deletion is due to the fact that such telecom areas pose an undue fire risk to the structural integrity of the building.)

Section 903.2.9; add Section 903.2.9.3 to read as follows:

903.2.9.3 Self-Service Storage Facility. An automatic sprinkler system shall be installed throughout all self-service storage facilities.

(Reason: Fire departments are unable to inspect these commercial occupancies and are unaware of the contents being stored. Previous allowance to separate units by fire barriers is difficult to enforce maintenance after opening.)

**Option A

Section 903.2.11; change 903.2.11.3 and add 903.2.11.7 and 903.2.11.8, as follows:

903.2.11.3 Buildings 55 Feet or more in Height. An automatic sprinkler system shall be installed throughout buildings that have one or more stories ~~with an occupant load of 30 or more~~, other than penthouses in compliance with Section 1510 of the *International Building Code*, located 55 feet (16 764 mm) or more above the lowest level of fire department vehicle access, measured to the finished floor.

Exceptions:

~~1.~~ Open parking structures in compliance with Section 406.5 of the *International Building Code, having no other occupancies above the subject garage.*

~~2. Occupancies in Group F-2.~~

903.2.11.7 High-Piled Combustible Storage. For any building with a clear height exceeding 12 feet (4572 mm), see Chapter 32 to determine if those provisions apply.

903.2.11.8 Spray Booths and Rooms. New and existing spray booths and spraying rooms shall be protected by an approved automatic fire-extinguishing system.

**Option B

Section 903.2.11; change 903.2.11.3 and add 903.2.11.7, 903.2.11.8, and 903.2.11.9 as follows:

903.2.11.3 Buildings ~~55~~ 35 feet or more in height. An automatic sprinkler system shall be installed throughout buildings that have one or more stories ~~with an occupant load of 30 or more~~, other than penthouses in compliance with Section 1510 of the *International Building Code*, located ~~55~~ 35 feet (~~16 764~~ 10 668 mm) or more above the lowest level of fire department vehicle access, measured to the finished floor.

Exceptions:

~~1.~~ Open parking structures in compliance with Section 406.5 of the *International Building Code, having no other occupancies above the subject garage*.

~~2. Occupancies in Group F-2.~~

903.2.11.7 High-Piled Combustible Storage. For any building with a clear height exceeding 12 feet (4572 mm), see Chapter 32 to determine if those provisions apply.

903.2.11.8 Spray Booths and Rooms. New and existing spray booths and spraying rooms shall be protected by an approved automatic fire-extinguishing system.

903.2.11.9 Buildings Over 6,000 sq. .ft. An automatic sprinkler system shall be installed throughout all buildings with a building area 6,000 sq. ft. or greater and in all existing buildings that are enlarged to be 6,000 sq. ft. or greater. For the purpose of this provision, fire walls shall not define separate buildings.

Exception: Open parking garages in compliance with Section 406.5 of the *International Building Code*.

(Reason: Provides jurisdictions options as to their desired level of sprinkler protection based on multiple factors including firefighting philosophies/capabilities.)

*****Section 903.3.1.1.1; change to read as follows:***

903.3.1.1.1 Exempt Locations. When approved by the *fire code official*, automatic sprinklers shall not be required in the following rooms or areas where such *...{text unchanged}…* because it is damp, of fire-resistance-rated construction or contains electrical equipment.

7. Any room where the application of water, or flame and water, constitutes a serious life or fire hazard.
8. Any room or space where sprinklers are considered undesirable because of the nature of the contents, when approved by the code official.
9. Generator and transformer rooms, under the direct control of a public utility, separated from the remainder of the building by walls and floor/ceiling or roof/ceiling assemblies having a fire-resistance rating of not less than 2 hours.
10. ~~In rooms or areas that are of noncombustible construction with wholly noncombustible contents.~~
11. ~~Fire service access~~ Elevator machine rooms, ~~and~~ machinery spaces, and hoistways, other than pits where such sprinklers would not necessitate shunt trip requirements under any circumstances.
12. {Delete.}

(Reason: Gives more direction to code official. Exception 4 deleted to provide protection where fire risks are poorly addressed. Amendment 903.2 addresses Exception 5 above relative to the elimination of sprinkler protection in these areas to avoid the shunt trip requirement.)

*****Section 903.3.1.2.3; add section to read as follows:***

[F] Section 903.3.1.2.3 Attics and Attached Garages. Sprinkler protection is required in attic spaces of such buildings two or more stories in height, in accordance with NFPA 13 and or NFPA 13R requirements, and attached garages.

(Reason: Attic protection is required due to issues with fire exposure via soffit vents, as well as firefighter safety. Several jurisdictions indicated experience with un-protected attic fires resulting in displacement of all building occupants. NFPA 13 provides for applicable attic sprinkler protection requirements, as well as exemptions to such, based on noncombustible construction, etc. Attached garages already require sprinklers via NFPA 13R – this amendment just re-emphasizes the requirement.)

******Section 903.3.1.3; change to read as follows:***

903.3.1.3 NFPA 13D Sprinkler Systems. *Automatic sprinkler systems* installed in one- and two-family *dwellings*; Group R-3; Group R-4 Condition 1 and *townhouses* shall be permitted to be installed throughout in accordance with NFPA 13D or in accordance with state law.

(Reason: To allow the use of the Plumbing section of the International Residential Code (IRC) and recognize current state stipulations in this regard.)

******Section 903.3.1.4; add to read as follows:***

[F] 903.3.1.4 Freeze protection. Freeze protection systems for automatic fire sprinkler systems shall be in accordance with the requirements of the applicable referenced NFPA standard and this section.

903.3.1.4.1 Attics. Only dry-pipe, preaction, or listed antifreeze automatic fire sprinkler systems shall be allowed to protect attic spaces.

Exception: Wet-pipe fire sprinkler systems shall be allowed to protect non-ventilated attic spaces where:

4. The attic sprinklers are supplied by a separate floor control valve assembly to allow ease of draining the attic system without impairing sprinklers throughout the rest of the building, and
5. Adequate heat shall be provided for freeze protection as per the applicable referenced NFPA standard, and
6. The attic space is a part of the building's thermal, or heat, envelope, such that insulation is provided at the roof deck, rather than at the ceiling level.

903.3.1.4.2 Heat trace/insulation. Heat trace/insulation shall only be allowed where approved by the fire code official for small sections of large diameter water-filled pipe.

(Reason: In the last few years, severe winters brought to light several issues with current practices for sprinklering attics, not the least of which was wet-pipe sprinklers in ventilated attics provided with space heaters, etc. for freeze protection of such piping. This practice is not acceptable for the protection of water-filled piping in a ventilated attic space as it does not provide a reliable means of maintaining the minimum 40 degrees required by NFPA, wastes energy, and presents a potential ignition source to the attic space. Listed antifreeze is specifically included because NFPA currently allows such even though there is no currently listed antifreeze at the time of development of these amendments. The intent of this amendment is to help reduce the large number of freeze breaks that have occurred in the past with water-filled wet-pipe sprinkler systems in the future, most specifically in attic spaces.)

*****Section 903.3.5; add a second paragraph to read as follows:***

[F] Water supply as required for such systems shall be provided in conformance with the supply requirements of the respective standards; however, every water-based fire protection system shall be designed with a 10 psi safety factor. Reference Section 507.4 for additional design requirements.

(Reason: To define uniform safety factor.)

*****Section 903.4; add a second paragraph after the exceptions to read as follows:***

Sprinkler and standpipe system water-flow detectors shall be provided for each floor tap to the sprinkler system and shall cause an alarm upon detection of water flow for more than 45 seconds. All control valves in the sprinkler and standpipe systems except for fire department hose connection valves shall be electrically supervised to initiate a supervisory signal at the central station upon tampering.

(Reason: To avoid significant water losses. Consistent with amendment to IFC 905.9.)

*****Section 903.4.2; add second paragraph to read as follows:***

The alarm device required on the exterior of the building shall be a weatherproof horn/strobe notification appliance with a minimum 75 candela strobe rating, installed as close as practicable to the fire department connection.

(Reason: Fire department connections are not always located at the riser; this allows the fire department faster access.)

*****Section 905.2; change to read as follows:***

905.2 Installation Standard. Standpipe systems shall be installed in accordance with this section and NFPA 14. Manual dry standpipe systems shall be supervised with a minimum of 10 psig and a maximum of 40 psig air pressure with a high/low alarm.

(Reason: To define manual dry standpipe supervision requirements. Helps ensure the integrity of the standpipe system via supervision, such that open hose valves will result in a supervisory low air alarm.)

******Section 905.3; add Section 905.3.9 and exception to read as follows:***

905.3.9 Buildings Exceeding 10,000 sq. ft. In buildings exceeding 10,000 square feet in area per story and where any portion of the building's interior area is more than 200 feet (60960 mm) of travel, vertically and horizontally, from the nearest point of fire department vehicle access, Class I automatic wet or manual wet standpipes shall be provided.

Exceptions:

3. Automatic dry and semi-automatic dry standpipes are allowed as provided for in NFPA 14.
4. R-2 occupancies of four stories or less in height having no interior corridors.

(Reason: Allows for the rapid deployment of hose lines to the body of the fire.)

******Section 905.4, change Item 1, 3, and 5, and add Item 7 to read as follows:***

1. In every required ~~interior~~ exit stairway, a hose connection shall be provided for each story above and below grade plane. Hose connections shall be located at an intermediate landing between stories, unless otherwise approved by the fire code official.
2. {No change.}
3. In every exit passageway, at the entrance from the exit passageway to other areas of a building.

Exception: Where floor areas adjacent to an exit passageway are reachable from an ~~interior~~ exit stairway hose connection by a {No change to rest.}

4. {No change.}
5. Where the roof has a slope less than four units vertical in 12 units horizontal (33.3-percent slope), each standpipe shall be provided with a two-way ~~a~~ hose connection ~~shall be~~ located to serve the roof or at the highest landing of an ~~interior~~ exit stairway with stair access to the roof provided in accordance with Section 1011.12.
6. {No change.}
7. When required by this Chapter, standpipe connections shall be placed adjacent to all required exits to the structure and at two hundred feet (200') intervals along major corridors thereafter, or as otherwise approved by the fire code official.

(Reason: Item 1, 3, and 5 amendments to remove 'interior' will help to clarify that such connections are required for all 'exit' stairways, to ensure firefighter capabilities are not diminished in these tall buildings, simply because the stair is on the exterior of the building. Item 5 reduces the amount of pressure required to facilitate testing, and provides backup protection for fire fighter safety. Item 7 allows for the rapid deployment of hose lines to the body of the fire.)

*****Section 905.9; add a second paragraph after the exceptions to read as follows:***

Sprinkler and standpipe system water-flow detectors shall be provided for each floor tap to the sprinkler system and shall cause an alarm upon detection of water flow for more than 45 seconds. All control valves in the sprinkler and standpipe systems except for fire department hose connection valves shall be electrically supervised to initiate a supervisory signal at the central station upon tampering.

(Reason: To avoid significant water losses. Consistent with amendment to IFC 903.4.)

*****Section 907.1; add Section 907.1.4 and 907.1.4.1 to read as follows:***

907.1.4 Design Standards. Where a new fire alarm system is installed, the devices shall be addressable. Fire alarm systems utilizing more than 20 smoke detectors shall have analog initiating devices.

(Reason: Provides for the ability of descriptive identification of alarms, and reduces need for panel replacement in the future. Updated wording to match the language of the new requirement at 907.5.2.3. Change of terminology allows for reference back to definitions of NFPA 72)

*****Section 907.2.1; change to read as follows:***

907.2.1 Group A. A manual fire alarm system that activates the occupant notification system in accordance with Section 907.5 shall be installed in Group A occupancies ~~where the~~ having an occupant load ~~due to the assembly occupancy is~~ of 300 or more persons or more than 100 persons above or below the lowest level of exit discharge. Group A occupancies not separated from one another in accordance with Section 707.3.~~-~~10 of the *International Building Code* shall be considered as a single occupancy for the purposes of applying this section. Portions of Group E occupancies occupied for assembly purposes shall be provided with a fire alarm system as required for the Group E occupancy.

Exception: {No change.}

Activation of fire alarm notification appliances shall:

1. Cause illumination of the *means of egress* with light of not less than 1 foot-candle (11 lux) at the walking surface level, and
2. Stop any conflicting or confusing sounds and visual distractions.

(Reason: Increases the requirement to be consistent with Group B requirement. Also addresses issue found in Group A occupancies of reduced lighting levels and other A/V equipment that distracts from fire alarm notification devices or reduces ability of fire alarm system to notify occupants of the emergency condition.)

******Section 907.2.3; change to read as follows:***

907.2.3 Group E. A manual fire alarm system that initiates the occupant notification signal utilizing an emergency voice/alarm communication system meeting the requirements of Section 907.5.2.2 and installed in accordance with Section 907.6 shall be installed in Group E educational occupancies. When *automatic sprinkler systems* or smoke detectors are installed, such systems or detectors shall be connected to the building fire alarm system. An approved smoke detection system shall be installed in Group E day care occupancies. Unless separated by a minimum of 100' open space, all buildings, whether portable buildings or the main building, will be considered one building for alarm occupant load consideration and interconnection of alarm systems.

Exceptions:

2. {No change.}

1.1. Residential In-Home day care with not more than 12 children may use interconnected single station detectors in all habitable rooms. (For care of more than five children 2 1/2 or less years of age, see Section 907.2.6.) {No change to remainder of exceptions.}

(Reason: To distinguish educational from day care occupancy minimum protection requirements. Further, to define threshold at which portable buildings are considered a separate building for the purposes of alarm systems. Exceptions provide consistency with State law concerning such occupancies.)

*****Section 907.2.13, Exception 3; change to read as follows:***

3. Open air portions of buildings with an occupancy in Group A-5 in accordance with Section 303.1 of the *International Building Code*; however, this exception does not apply to accessory uses including but not limited to sky boxes, restaurants, and similarly enclosed areas.

(Reason: To indicate that enclosed areas within open air seating type occupancies are not exempted from automatic fire alarm system requirements.)

*****Section 907.4.2; add Section 907.4.2.7 to read as follows:***

907.4.2.7 Type. Manual alarm initiating devices shall be an approved double action type.

(Reason: Helps to reduce false alarms.)

******Section 907.6.1; add Section 907.6.1.1 to read as follows:***

907.6.1.1 Wiring Installation. All fire alarm systems shall be installed in such a manner that a failure of any single initiating device or single open in an initiating circuit conductor will not interfere with the normal operation of other such devices. All signaling line circuits (SLC) shall be installed in such a way that a single open will not interfere with the operation of any addressable devices (Class A). Outgoing and return SLC conductors shall be installed in accordance with NFPA 72 requirements for Class A circuits and shall have a minimum of four feet separation horizontal and one foot vertical between supply and return circuit conductors. The initiating device circuit (IDC) from a signaling line circuit interface device may be wired Class B, provided the distance from the interface device to the initiating device is ten feet or less.

(Reason: To provide uniformity in system specifications and guidance to design engineers. Improves reliability of fire alarm devices and systems.)

******Section 907.6.3; delete all four Exceptions.***

(Reason: To assist responding personnel in locating the emergency event for all fire alarm systems. This is moved from 907.6.5.3 in the 2012 IFC and reworded to match new code language and sections.)

******Section 907.6.6; – add sentence at end of paragraph to read as follows:***

[F] See 907.6.3 for the required information transmitted to the supervising station.

(Reason: To assist responding personnel in locating the emergency event for all fire alarm systems. This is moved from 907.6.5.3 in the 2012 IFC and reworded to match new code language and sections.)

******Section 909.22; add to read as follows:***

909.22 Stairway or Ramp Pressurization Alternative. Where the building is equipped throughout with an automatic sprinkler system in accordance with Section 903.3.1.1 and the stair pressurization alternative is chosen for compliance with Building Code requirements for a smokeproof enclosure, interior exit stairways or ramps shall be pressurized to a minimum of 0.10 inches of water (25 Pa) and a maximum of 0.35 inches of water (87 Pa) in the shaft relative to the building measured with all interior exit stairway and ramp doors closed under maximum anticipated conditions of stack effect and wind effect.

Such systems shall comply with Section 909, including the installation of a separate fire-fighter's smoke control panel as per Section 909.16, and a Smoke Control Permit shall be required from the fire department as per Section 105.7.

[F] 909.22.1 Ventilating equipment. The activation of ventilating equipment for the stair or ramp pressurization system shall be by smoke detectors installed at each floor level at an approved location at the entrance to the smokeproof enclosure. When the closing device for the stairway or ramp shaft and vestibule doors is activated by smoke detection or power failure, the mechanical equipment shall activate and operate at the required performance levels. Smoke detectors shall be installed in accordance with Section 907.3.

909.22.1.1 Ventilation Systems. Smokeproof enclosure ventilation systems shall be independent of other building ventilation systems. The equipment, control wiring, power wiring and ductwork shall comply with one of the following:

1. Equipment, control wiring, power wiring and ductwork shall be located exterior to the building and directly connected to the smokeproof enclosure or connected to the smokeproof enclosure by ductwork enclosed by not less than 2-hour fire barriers constructed in accordance with Section 707 of the Building Code or horizontal assemblies constructed in accordance with Section 711 of the Building Code, or both.
2. Equipment, control wiring, power wiring and ductwork shall be located within the smokeproof enclosure with intake or exhaust directly from and to the outside or through ductwork enclosed by not less than 2-hour barriers constructed in accordance with Section 707 of the Building Code or horizontal assemblies constructed in accordance with Section 711 of the Building Code, or both.
3. Equipment, control wiring, power wiring and ductwork shall be located within the building if separated from the remainder of the building, including other mechanical equipment, by not less than 2-hour fire barriers constructed in accordance with Section 707 of the Building Code or horizontal assemblies constructed in accordance with Section 711 of the Building Code, or both.

Exceptions:

1. Control wiring and power wiring utilizing a 2-hour rated cable or cable system.
2. Where encased with not less than 2 inches (51 mm) of concrete.
3. Control wiring and power wiring protected by a listed electrical circuit protective systems with a fire-resistance rating of not less than 2 hours.

909.21.1.2 Standby Power. Mechanical vestibule and stairway and ramp shaft ventilation systems and automatic fire detection systems shall be provided with standby power in accordance with Section 2702 of the Building Code.

909.22.1.3 Acceptance and Testing. Before the mechanical equipment is approved, the system shall be tested in the presence of the fire code official to confirm that the system is operating in compliance with these requirements.

(Reason: To assist with enforcement of such as a smoke control system, as per Section 909.6.3, especially since a permit is now specifically required for such systems in the Fire Code. Also ensures that a firefighter's override panel is provided as per 909.16 for such systems. The above amendment copies the applicable requirements for such systems from Section 909.20 of the Building Code into the Fire Code. Although the published code did copy the elevator pressurization requirements into the Fire Code, it did not copy over the stair pressurization requirements.)

******Section 910.2; change Exception 2. and 3.to read as follows:***

[F] 2. Only manual smoke and heat removal shall ~~not~~ be required in areas of buildings equipped with early suppression fast-response (ESFR) sprinklers. Automatic smoke and heat removal is prohibited.

3. Only manual smoke and heat removal shall ~~not~~ be required in areas of buildings equipped with control mode special application sprinklers with a response time index of $50(m*S)^{1/2}$ or less that

are listed to control a fire in stored commodities with 12 or fewer sprinklers. Automatic smoke and heat removal is prohibited.

(Reason: Allows the fire department to control the smoke and heat during and after a fire event, while still prohibiting such systems from being automatically activated, which is a potential detriment to the particular sprinkler systems indicated.)

*****Section 910.2; add subsections 910.2.3 with exceptions to read as follows:***

910.2.3 Group H. Buildings and portions thereof used as a Group H occupancy as follows:

1. In occupancies classified as Group H-2 or H-3, any of which are more than 15,000 square feet (1394 m^2) in single floor area.

   Exception: Buildings of noncombustible construction containing only noncombustible materials.

2. In areas of buildings in Group H used for storing Class 2, 3, and 4 liquid and solid oxidizers, Class 1 and unclassified detonable organic peroxides, Class 3 and 4 unstable (reactive) materials, or Class 2 or 3 water-reactive materials as required for a high-hazard commodity classification.

   Exception: Buildings of noncombustible construction containing only noncombustible materials.

(Reason: Maintains a fire protection device utilized in such occupancies where it is sometimes necessary to allow chemicals to burn out, rather than extinguish.)

******Section 910.3; add section 910.3.4 to read as follows:***

910.3.4 Vent Operation. Smoke and heat vents shall be capable of being operated by approved automatic and manual means. Automatic operation of smoke and heat vents shall conform to the provisions of Sections 910.3.2.1 through 910.3.2.3.

[F] 910.3.4.1 Sprinklered buildings. Where installed in buildings equipped with an approved automatic sprinkler system, smoke and heat vents shall be designed to operate automatically.
The automatic operating mechanism of the smoke and heat vents shall operate at a temperature rating at least 100 degrees F (approximately 38 degrees Celsius) greater than the temperature rating of the sprinklers installed.

Exception: Manual only systems per Section 910.2.

910.3.4.2 Nonsprinklered Buildings. Where installed in buildings not equipped with an approved automatic sprinkler system, smoke and heat vents shall operate automatically by actuation of a heat-responsive device rated at between 100°F (56°C) and 220°F (122°C) above ambient.
Exception: Listed gravity-operated drop out vents.

(Reason: Amendment continues to keep applicable wording from prior to the 2012 edition of the IFC. Specifically, automatic activation criteria is no longer specifically required in the published code. Specifying a temperature range at which smoke and heat vents should activate in sprinklered buildings helps to ensure that the sprinkler system has an opportunity to activate and control the fire prior to vent operation.)

******Section 910.4.3.1; change to read as follows:***

910.4.3.1 Makeup Air. Makeup air openings shall be provided within 6 feet (1829 mm) of the floor level. Operation of makeup air openings shall be ~~manual or~~ automatic. The minimum gross area of makeup air inlets shall be 8 square feet per 1,000 cubic feet per minute (0.74 m2 per 0.4719 m3/s) of smoke exhaust.

(Reason: Makeup air has been required to be automatic for several years now in this region when mechanical smoke exhaust systems are proposed. This allows such systems to be activated from the smoke control panel by first responders without having to physically go around the exterior of the building opening doors manually. Such requires a significant number of first responders on scene to conduct this operation and significantly delays activation and/or capability of the smoke exhaust system.)

******Section 910.4.4; change to read as follows:***

910.4.4 Activation. The mechanical smoke removal system shall be activated ~~by manual controls only~~ automatically by the automatic sprinkler system or by an approved fire detection system. Individual manual controls shall also be provided.

Exception: Manual only systems per Section 910.2.

(Reason: The provision of a manual only mechanical smoke removal system does not provide equivalency with automatic smoke and heat vents. This amendment clarifies that the primary intent is for automatic systems, unless exceptions are provided as in 910.2 – consistent with the charging statements of the section.)

*****Section 912.2; add Section 912.2.3 to read as follows:***

912.2.3 Hydrant Distance. An approved fire hydrant shall be located within 100 feet of the fire department connection as the fire hose lays along an unobstructed path.

(Reason: To accommodate limited hose lengths, improve response times where the FDC is needed to achieve fire control, and improve ease of locating a fire hydrant in those situations also. Also, consistent with NFPA 14 criteria.)

*****Section 913.2.1; add second paragraph and exception to read as follows:***

When located on the ground level at an exterior wall, the fire pump room shall be provided with an exterior fire department access door that is not less than 3 ft. in width and 6 ft. – 8 in. in height, regardless of any interior doors that are provided. A key box shall be provided at this door, as required by Section 506.1.

Exception: When it is necessary to locate the fire pump room on other levels or not at an exterior wall, the corridor leading to the fire pump room access from the exterior of the building shall be provided with equivalent fire resistance as that required for the pump room, or as approved by the *fire code official*. Access keys shall be provided in the key box as required by Section 506.1.

(Reason: This requirement allows fire fighters safer access to the fire pump room. The requirement allows access without being required to enter the building and locate the fire pump room interior access door during a fire event. The exception recognizes that this will not always be a feasible design scenario for some buildings, and as such, provides an acceptable alternative to protect the pathway to the fire pump room.)

******Section 914.3.1.2; change to read as follows:***

914.3.1.2 Water Supply to required Fire Pumps. In buildings that are more than ~~420~~ 120 feet (128 m) in *building height*, required fire pumps shall be supplied by connections to no fewer than two water mains located in different streets. Separate supply piping shall be provided between each connection to the water main and the pumps. Each connection and the supply piping between the connection and the pumps shall be sized to supply the flow and pressure required for the pumps to operate.

Exception: {No change to exception.}

(Reason: The 2009 edition of the IFC added this requirement based on a need for redundancy of the water supply similar to the redundancy of the power supply to the fire pumps required for such tall

buildings, partially due to the fact that these buildings are rarely fully evacuated in a fire event. More commonly, the alarm activates on the floor of the event, the floor above and the floor below. Back-up power to the fire pump becomes critical for this reason. Certainly, the power is pointless if the water supply is impaired for any reason, so a similar requirement is provided here for redundant water supplies. The 2015 edition changes the requirement to only apply to very tall buildings over 420 ft. This amendment modifies/lowers the requirement to 120 ft., based on this same height requirement for fire service access elevators. Again, the language from the 2009 and 2012 editions of the code applied to any high-rise building. This compromise at 120 ft. is based on the above technical justification of defend-in-place scenarios in fire incidents in such tall structures.)

****Section 1006.2.2.6; add a new Section 1006.2.2.6 as follows:**

1006.2.2.6 Electrical Rooms. For electrical rooms, special exiting requirements may apply. Reference the Electrical Code as adopted.

(Reason: Cross reference necessary for coordination with the NEC which has exiting requirements as well.)

*****Section 1009.1; add the following Exception 4:***

Exceptions:

{previous exceptions unchanged}

4. Buildings regulated under State Law and built in accordance with State registered plans, including any variances or waivers granted by the State, shall be deemed to be in compliance with the requirements of Section 1009.

(Reason: To accommodate buildings regulated under Texas State Law and to be consistent with amendments to Chapter 11.)

*****Section 1010.1.9.4 Bolt Locks; change Exceptions 3 and 4 to read as follows:***

Exceptions:

4. Where a pair of doors serves an *occupant load* of less than 50 persons in a Group B, F, M or S occupancy. {*Remainder unchanged*}
5. Where a pair of doors serves a Group A, B, F, M or S occupancy {*Remainder unchanged*}

(Reason: Application to M occupancies reflects regional practice; No. 4 expanded to Group A due to it being a similar scenario to other uses; No. 4 was regional practice.)

******Section 1015.8 Window Openings; change number 1 to read as follows:***

1. Operable windows where the top of the sill of the opening is located more than ~~75 feet (22 860 mm~~) 55 (16 764 mm) above the finished grade or other surface below and that are provided with window fall prevention devices that comply with ASTM F 2006.

(Reason: In Option B jurisdictions, change "75 feet" to "55 feet".)

*****Section 1020.1 Construction; add Exception 6 to read as follows:***

6. In group B occupancies, corridor walls and ceilings need not be of fire-resistive construction within a single tenant space when the space is equipped with approved automatic smoke-detection within the corridor. The actuation of any detector shall activate self-annunciating alarms audible in all areas within

the corridor. Smoke detectors shall be connected to an approved automatic fire alarm system where such system is provided.

(Reason: Revise the 2012 published NCTCOG amendment to this section to clarify intent is not to require automatic fire alarm system or notification throughout the tenant space, but rather, only in the corridor.)

****Section 1029.1.1.1; delete this section. Spaces under Grandstands and Bleachers:**

(*Reason: Unenforceable*.)

*****Section 1031.2; change to read as follows:***

1031.2 Reliability. Required *exit accesses, exits* and *exit discharges* shall be continuously maintained free from obstructions or impediments to full instant use in the case of fire or other emergency ~~when the building area served by the means of egress is occupied~~. An *exit* or *exit passageway* shall not be used for any purpose that interferes with a means of egress.

(Reason: Maintain legacy levels of protection and long-standing regional practice, and provide firefighter safety.)

*****Section 1103.3; add sentence to end of paragraph as follows:***

Provide emergency signage as required by Section 607.3.

(Reason: Coordinates requirements of previous amendment.)

*****Section 1103.5; add Section 1103.5.1 to read as follows:***

1103.5.1 Group A-2. ~~An automatic sprinkler system shall be installed in accordance with Section 903.3.1.1 throughout existing buildings or portions thereof used as Group A-2 occupancies with an occupant load of 300 or more~~. **Spray Booths and Rooms.** Existing spray booths and spray rooms shall be protected by an approved automatic fire-extinguishing system in accordance with Section 2404.

(Reason: Consistent with amendment to IFC 2404, and long-standing regional requirement. The published 1103.5.1 requiring sprinklers retroactively in A-2 occupancies was deleted by ICC Errata.)

*****Section 1103.7; add Section 1103.7.8 and 1103.7.8.1 to read as follows:**

1103.7.8 Fire Alarm System Design Standards. Where an existing fire alarm system is upgraded or replaced, the devices shall be addressable. Fire alarm systems utilizing more than 20 smoke and/or heat detectors shall have analog initiating devices.

> **Exception:** Existing systems need not comply unless the total building, or fire alarm system, remodel or expansion exceeds 30% of the building. When cumulative building, or fire alarm system, remodel or expansion initiated after the date of original fire alarm panel installation exceeds 50% of the building, or fire alarm system, the fire alarm system must comply within 18 months of permit application.
>
> **1103.7.8.1 Communication requirements.** Refer to Section 907.6.6 for applicable requirements.

(Reason: To assist responding personnel in locating the emergency event and provide clarity as to percentages of work that results in a requirement to upgrade the entire fire alarm system.)

*****Section 2304.1; change to read as follows:***

2304.1 Supervision of Dispensing. The dispensing of fuel at motor fuel-dispensing facilities shall be ~~conducted by a qualified attendant or shall be under the supervision of a qualified attendant at all times or shall be~~ in accordance with ~~Section 2204.3.~~ the following:

1. Conducted by a qualified attendant; and/or,

2. Shall be under the supervision of a qualified attendant; and/or

3. Shall be an unattended self-service facility in accordance with Section 2304.3.

At any time the qualified attendant of item Number 1 or 2 above is not present, such operations shall be considered as an unattended self-service facility and shall also comply with Section 2304.3.

(Reason: Allows a facility to apply the attended and unattended requirements of the code when both are potentially applicable.)

*****Section 2401.2; delete this section.***
(Reason: This section eliminates such booths from all compliance with Chapter 15 including, but not limited to: size, ventilation, fire protection, construction, etc. If the product utilized is changed to a more flammable substance, the lack of compliance with Chapter 15 could result in significant fire or deflagration and subsequent life safety hazard.)

******Table 3206.2, footnote j; change text to read as follows:***

j. ~~Not required~~ Where storage areas are protected by either early suppression fast response (ESFR) sprinkler systems or control mode special application sprinklers with a response time index of 50 (m • s) 1/2 or less that are listed to control a fire in the stored commodities with 12 or fewer sprinklers, installed in accordance with NFPA 13, manual smoke and heat vents or manually activated engineered mechanical smoke exhaust systems shall be required within these areas.

(Reason: Allows the fire department to control the smoke and heat during and after a fire event, while ensuring proper operation of the sprinkler protection provided. Also, gives an alternative to smoke and heat vents.)

*****Section 3310.1; add sentence to end of paragraph to read as follows:***

When fire apparatus access roads are required to be installed for any structure or development, they shall be approved prior to the time at which construction has progressed beyond completion of the foundation of any structure.

(Reason: Reference requirement of Section 501.4.)

*****Section 5601.1.3; change to read as follows:***

5601.1.3 Fireworks. The possession, manufacture, storage, sale, handling, and use of fireworks are prohibited.

Exceptions:

1. Only when approved for fireworks displays, storage, and handling of fireworks as allowed in Section 5604 and 5608.

~~2. Manufacture, assembly and testing of fireworks as allowed in Section 5605.~~

~~3.~~2. The use of fireworks for approved fireworks displays as allowed in Section 5608.

~~4. The possession, storage, sale~~… *{Delete remainder of text.}*

(Reason: Restricts fireworks to approved displays only, which is consistent with regional practice. Such is intended to help protect property owners and individuals from unintentional fireworks fires within the jurisdiction, as well as to help protect individuals from fireworks injuries. It is noted that there has been a change in the State Law to allow possession of unopened fireworks in certain areas of the vehicle, and it is highly recommended that AHJ's familiarize themselves with the applicable State Laws in this regard.)

Section 5703.6; add a sentence to read as follows:

5703.6 Piping Systems. Piping systems, and their component parts, for flammable and combustible liquids shall be in accordance with Sections 5703.6.1 through 5703.6.11. An *approved* method of secondary containment shall be provided for underground tank and piping systems.

(Reason: Increased protection in response to underground leak problems and remediation difficulty in underground applications. Coordinates with TCEQ requirements.)

Section 5704.2.9.5; change Section 5704.2.9.5 and add Section 5704.2.9.5.3 to read as follows:

5704.2.9.5 Above-ground Tanks Inside of Buildings. Above-ground tanks inside of buildings shall comply with Section 5704.2.9.5.1 ~~and 5704.2.9.5.2~~ through 5704.2.9.5.3.
5704.2.9.5.1 {No change.}
5704.2.9.5.2 {No change.}
5704.2.9.5.3 Combustible Liquid Storage Tanks Inside of Buildings. The maximum aggregate allowable quantity limit shall be 3,000 gallons (11 356 L) of Class II or III combustible liquid for storage in protected aboveground tanks complying with Section 5704.2.9.7 when all of the following conditions are met:

1. The entire 3,000 gallon (11 356 L) quantity shall be stored in protected above-ground tanks;

2. The 3,000 gallon (11 356 L) capacity shall be permitted to be stored in a single tank or multiple smaller tanks;

3. The tanks shall be located in a room protected by an *automatic sprinkler system* complying with Section 903.3.1.1; and

4. Tanks shall be connected to fuel-burning equipment, including generators, utilizing an *approved* closed piping system.

The quantity of combustible liquid stored in tanks complying with this section shall not be counted towards the maximum allowable quantity set forth in Table 5003.1.1(1), and such tanks shall not be required to be located in a control area. Such tanks shall not be located more than two stories below grade.

(Reason: Relocated from exception to 603.3.2.1 as published, as per reason statement for deletion in that section.)

Section 5704.2.11.4; add a sentence to read as follows:

5704.2.11.4 Leak Prevention. Leak prevention for underground tanks shall comply with Sections 5704.2.11.4.1 ~~and 5704.2.11.5.2~~ through 5704.2.11.4.3. An *approved* method of secondary containment shall be provided for underground tank and piping systems.

(Reason: Increased protection in response to underground leak problems and remediation difficulty in underground applications.)

Section 5704.2.11.4.2; change to read as follows:

5704.2.11.4.2 Leak Detection. Underground storage tank systems shall be provided with an *approved* method of leak detection from any component of the system that is designed and installed in accordance with NFPA 30 and as specified in Section 5704.2.11.4.3.

(Reason: Reference to IFC Section 5704.2.11.4.3 amendment.)

*****Section 5704.2.11.4; add Section 5704.2.11.4.3 to read as follows:***

5704.2.11.4.3 Observation Wells. Approved sampling tubes of a minimum 4 inches in diameter shall be installed in the backfill material of each underground flammable or combustible liquid storage tank. The tubes shall extend from a point 12 inches below the average grade of the excavation to ground level and shall be provided with suitable surface access caps. Each tank site shall provide a sampling tube at the corners of the excavation with a minimum of 4 tubes. Sampling tubes shall be placed in the product line excavation within 10 feet of the tank excavation and one every 50 feet routed along product lines towards the dispensers, a minimum of two are required.

(Reason: Provides an economical means of checking potential leaks at each tank site.)

*****Section 6103.2.1; add Section 6103.2.1.8 to read as follows:***

6103.2.1.8 Jewelry Repair, Dental Labs and Similar Occupancies. Where natural gas service is not available, portable LP-Gas containers are allowed to be used to supply approved torch assemblies or similar appliances. Such containers shall not exceed 20-pound (9.0 kg) water capacity. Aggregate capacity shall not exceed 60-pound (27.2 kg) water capacity. Each device shall be separated from other containers by a distance of not less than 20 feet.

(Reason: To provide a consistent and reasonable means of regulating the use of portable LP-Gas containers in these situations. Reduces the hazard presented by portable containers when natural gas is already available. Please note that current State Law does not allow for the enforcement of any rules more stringent than that adopted by the State, so this amendment is only applicable as to the extent allowed by that State Law.)

Section 6104.2, Exception; add an exception 2 to read as follows:

Exceptions:

1. *{existing text unchanged}*

2. Except as permitted in Sections 308 and 6104.3.2, LP-gas containers are not permitted in residential areas.

(Reason: To provide a consistent and reasonable means of regulating the use LP-Gas containers. Reduces the hazard presented by such containers when natural gas is already available. References regional amendment to IFC 6104.3.2. Please note that current State Law does not allow for the enforcement of any rules more stringent than that adopted by the State, so this amendment is only applicable as to the extent allowed by that State Law.)

*****Section 6104.3; add Section 6104.3.2 to read as follows:***

6104.3.2 Spas, Pool Heaters, and Other Listed Devices. Where natural gas service is not available, an LP-gas container is allowed to be used to supply spa and pool heaters or other listed devices. Such container shall not exceed 250-gallon water capacity per lot. See Table 6104.3 for location of containers.

Exception: Lots where LP-gas can be off-loaded wholly on the property where the tank is located may install up to 500 gallon above ground or 1,000 gallon underground approved containers.

(Reason: Allows for an alternate fuel source. Dwelling density must be considered and possibly factored into zoning restrictions. Reduces the hazard presented by over-sized LP-Gas containers. Please note that current State Law does not allow for the enforcement of any rules more stringent than that adopted by the State, so this amendment is only applicable as to the extent allowed by that State Law.)

******Section 6107.4 and 6109.13; change to read as follows:***

6107.4 Protecting Containers from Vehicles. Where exposed to vehicular damage due to proximity to alleys, driveways or parking areas, LP-gas containers, regulators and piping shall be protected in accordance with ~~NFPA 58~~ Section 312.

6109.13 Protection of Containers. LP-gas containers shall be stored within a suitable enclosure or otherwise protected against tampering. Vehicle impact protection shall be provided as required by Section 6107.4.

~~**Exception:** Vehicle impact protection shall not be required for protection of LP-gas containers where the containers are kept in lockable, ventilated cabinets of metal construction.~~

(Reason: NFPA 58 does not provide substantial physical protection [it allows raised sidewalks, fencing, ditches, parking bumpers as 'vehicle barrier protection'] of the container(s) from vehicular impact as is required and has been required historically, as per Section 312, i.e. bollard protection. Further, the exception to Section 6109.13 would allow for portable containers in ventilated metal cabinets to not require any physical protection whatsoever from vehicular impact, regardless of the location of the containers. Please note that current State Law does not allow for the enforcement of any rules more stringent than that adopted by the State, so this amendment is only applicable as to the extent allowed by that State Law.)

****** {Applicable to those jurisdictions adopting Appendix B}***
Table B105.2; change footnote a. to read as follows:

a. The reduced fire-flow shall be not less than 1,000 1,500 gallons per minute.

(Reason: The minimum fire-flow of 1,500 gpm for other than one- and two- family dwellings has existed since the 2000 edition of the IFC, as well as the Uniform Fire Code before that. Little to no technical justification was provided for the proposed code change at the code hearings. The board believes that the already-allowed 75 percent reduction in required fire-flow for the provision of sprinkler protection is already a significant trade-off. The minimum 1,500 gpm is not believed to be overly stringent for the vast majority of public water works systems in this region, especially since it has existed as the requirement for so many years. Further, the continued progression of trading off more and more requirements in the codes for the provision of sprinkler protection has made these systems extremely operation-critical to the safety of the occupants and properties in question. In other words, should the sprinkler system fail for any reason, the fire-flow requirements drastically increase from that anticipated with a sprinkler-controlled fire scenario.

END

Recommended Amendments to the 2015 International Plumbing Code

North Central Texas Council of Governments Region

The following sections, paragraphs, and sentences of the *2015 International Plumbing Code* are hereby amended as follows: Standard type is text from the IPC. Underlined type is text inserted. ~~Lined through type is deleted text from the IPC.~~ A double asterisk at the beginning of a section identifies an amendment carried over from the 2012 edition of the code and a triple asterisk identifies a new or revised amendment with the 2015 edition of the code.

Note: Historically NCTCOG has limited Chapter 1 amendments in order to allow each city to insert their local policies and procedures. We now have suggested certain items to be brought to the attention of cities considering adoption of the code that may be of concern to several jurisdictions. **It is still intended to be discretionary to each city to determine which Chapter 1 amendments to include.**

*****Table of Contents, Chapter 7, Section 714; change to read as follows:***

714 Engineered ~~Computerized~~ Drainage Design 69

(Reason: Editorial change to make compatible with amendment to Section 714.1.)

Section 102.8; change to read as follows:

102.8 Referenced codes and standards. The codes and standards referenced in this code shall be those that are listed in Chapter 15 and such codes, when specifically adopted, and standards shall be considered as part of the requirements of this code to the prescribed extent of each such reference. Where the differences occur between provisions of this code and the referenced standards, the provisions of this code shall be the minimum requirements. Whenever amendments have been adopted to the referenced codes and standards, each reference to said code and standard shall be considered to reference the adopted amendments. Any reference to NFPA 70 or the *National Electrical Code* (NEC) shall mean the Electrical Code as adopted.

(Reason: Legal wording to recognize locally adopted codes and amendments adopted with referenced codes.)

Sections 106.6.2 and 106.6.3; change to read as follows:

106.6.2 Fee schedule. The fees for all plumbing work shall be as ~~indicated in the following schedule: (JURISDICTION TO INSERT APPROPRIATE SCHEDULE)~~ adopted by resolution of the governing body of the jurisdiction.

106.6.3 Fee Refunds. The code official shall establish a policy for ~~authorize~~ authorizing the refunding of fees ~~as follows~~. *{Delete balance of section}*

(Reason: This calls to attention of local jurisdictions considering adoption that they need a fee schedule and a refund policy.)

Section 109; delete entire section and insert the following:

SECTION 109

MEANS OF APPEAL

109.1 Application for appeal. Any person shall have the right to appeal a decision of the code official to the board of appeals established by ordinance. The board shall be governed by the enabling ordinance.

(Reason: Most jurisdictions already have an ordinance establishing and governing an appeals board for this code. This also calls to the attention of jurisdictions not having such a board that it needs to be established.)

Section 305.4.1; change to read as follows:

305.4.1 Sewer depth. ~~Building sewers that connect to private sewage disposal systems shall be a minimum of [number] inches (mm) below finished grade at the point of septic tank connection.~~ Building sewers shall be a minimum of 12 inches (304 mm) below grade.

(Reason: Provides sewer depth that is common in this region. Deleted reference to private sewage disposal because a private sewage disposal code is not typically adopted in this region.)

Section 305.7; change to read as follows:

305.7 Protection of components of plumbing system. Components of a plumbing system installed within 3 feet along alleyways, driveways, parking garages or other locations in a manner in which they could be exposed to damage shall be recessed into the wall or otherwise protected in an *approved* manner.

(Reason: Provide a common cutoff point to designate a general separation distance at which plumbing systems should be safe for consistency in enforcement.)

Section 314.2.1; change to read as follows:

314.2.1 Condensate disposal. Condensate from all cooling coils and evaporators shall be conveyed from the drain pan outlet to an *approved* place of disposal. ... {text unchanged} **...** Condensate shall not discharge into a street, alley, sidewalk, rooftop, or other areas so as to cause a nuisance.

(Reason: Greater specificity in prohibited locations for condensate discharge. It is the intent of this amendment to send condensate discharge into a sanitary sewer drain. Consistent with regional amendment to IMC 307.2.1.)

Section 409.2; change to read as follows:

409.2 Water connection. The water supply to a commercial dishwashing machine shall be protected against backflow by an air gap or backflow preventer in accordance with Section 608. (Remainder of section unchanged)

(Reason: Domestic dishwashing machines would be difficult to enforce and should already come equipped with backflow preventers. Consistent with regional amendments in IPC Section 608.)

Section 412.4; change to read as follows:

412.4 Required location for floor drains ~~Public laundries and central washing facilities~~. Floor drains shall be installed in the following areas.

1. In public coin-operated laundries and in the central washing facilities of multiple family dwellings, the rooms containing automatic clothes washers shall be provided with floor drains located to readily drain the entire floor area. Such drains shall have a minimum outlet of not less than 3 inches (76 mm) in diameter.

2. Commercial kitchens. In lieu of floor drains in commercial kitchens, the code official may accept floor sinks.

3. Public restrooms.

(Reason: To make more compatible with local health code practices.)

*****Section 419.3; change to read as follows:***

419.3 Surrounding material. Wall and floor space to a point 2 feet (610 mm) in front of a urinal lip and 4 feet (1219 mm) above the floor and at least 2 feet (610 mm) to each side of the urinal shall be waterproofed with a smooth, readily cleanable, hard, nonabsorbent material.

(Reason: Match un-amended IBC 1210.2.2.)

******Section 502.3; change to read as follows:***

502.3 Appliances in attics. Attics containing a water heater shall be provided . . . {bulk of paragraph unchanged} . . . side of the water heater. The clear access opening dimensions shall be a minimum of 20 inches by 30 inches (508 mm by 762 mm), or larger where such dimensions be not less than 20 inches by 30 inches(508mm by 762mm) where such dimensions are large enough to allow removal of the water heater. A walkway to an appliance shall be rated as a floor as approved by the building official. As a minimum, for access to the attic space, provide one of the following:

1. A permanent stair.

2. A pull down stair with a minimum 300 lb (136 kg) capacity.

3. An access door from an upper floor level.

4. Access Panel may be used in lieu of items 1, 2, and 3 with prior approval of the code official due to building conditions.

Exceptions:

1. The passageway and level service space are not required where the appliance is capable of being serviced and removed… {remainder of section unchanged}

(Reason: To provide a safe means of accessibility to appliances in attics and to allow for different types of construction limitations. Consistent with regional amendment to IMC and IFGC)

*****Section 502.6; add Section 502.6 to read as follows:***

502.6 Water heaters above ground or floor. When the attic, roof, mezzanine or platform in which a water heater is installed is more than eight (8) feet (2438 mm) above the ground or floor level, it shall be made accessible by a stairway or permanent ladder fastened to the building.

Exception: A max 10 gallon water heater (or larger with approval) is capable of being accessed through a lay-in ceiling and a water heater is installed is not more than ten (10) feet (3048 mm) above the ground or floor level and may be reached with a portable ladder.

(Reason: To provide safe access to water heaters. (Consistent with regional amendments to IFGC 306.7 and IMC 306.3. Note reference to amendment above.)

*****Section 504.6; change to read as follows:***

504.6 Requirements for discharge piping. The discharge piping serving a pressure relief valve, temperature relief valve or combination thereof shall:

1. Not be directly connected to the drainage system.

2. Discharge through an air gap. ~~located in the same room as the water heater~~.

3. Not be smaller than the diameter of the outlet of the valve served and shall discharge full size to the air gap.

4. Serve a single relief device and shall not connect to piping serving any other relief device or equipment.

   Exception: Multiple relief devices may be installed to a single T & P discharge piping system when *approved* by the administrative authority and permitted by the manufactures installation instructions and installed with those instructions.

5. Discharge ~~to the floor,~~ to an indirect waste receptor or to the outdoors.

6. Discharge in a manner that does not cause personal injury or structural damage.

7. Discharge to a termination point that is readily observable by the building occupants.

8. Not be trapped.

9. Be installed so as to flow by gravity.

10. Terminate not more than 6 inches above and not less than two times the discharge pipe diameter above the floor or flood level rim of the waste receptor.

11. Not have a threaded connection at the end of such piping.

12. Not have valves or tee fittings.

13. Be constructed of those materials listed in Section 605.4 or materials tested, rated and *approved* for such use in accordance with ASME A112.4.1.

(Reason: To provide a higher degree of safety.)

******Section 504.7.1; change to read as follows:***

Section 504.7.1 Pan size and drain to read as follows: The pan shall be not less than 11/2 inches (38 mm) in depth and shall be of sufficient size and shape to receive all dripping or condensate from the tank or water heater. The pan shall be drained by an indirect waste pipe having a diameter of not less than 3/4 inch (19 mm). Piping for safety pan drains shall be of those materials listed in Table 605.4. Multiple pan drains may terminate to a single discharge piping system when *approved* by the administrative authority and permitted by the manufactures installation instructions and installed with those instructions.

*****Section 604.4; add Section 604.4.1 to read as follows:***

604.4.1 State maximum flow rate. Where the State mandated maximum flow rate is more restrictive than those of this section, the State flow rate shall take precedence.

(Reason: To recognize State standards.)

*****Section 606.1; delete items #4 and #5.***

(Reason: The code is too restrictive as written.)

*****Section 606.2; change to read as follows:***

606.2 Location of shutoff valves. Shutoff valves shall be installed in the following locations:

1. On the fixture supply to each plumbing fixture other than bathtubs and showers in one- and twofamily residential occupancies, and other than in individual sleeping units that are provided with unit shutoff valves in hotels, motels, boarding houses and similar occupancies.

2. ~~On the water supply pipe to each sillcock~~.

3. On the water supply pipe to each appliance or mechanical equipment.

(Reason: To provide shut-off valves to every fixture.)

*****Section 608.1; change to read as follows:***

608.1 General. A potable water supply system shall be designed, installed and maintained in such a manner so as to prevent contamination from non-potable liquids, solids or gases being introduced into the potable water supply through cross-connections or any other piping connections to the system. Backflow preventer applications shall conform to applicable local regulations, Table 608.1, ~~except~~ and as specifically stated in Sections 608.2 through 608.16.10.

(Reason: To recognize local requirements.)

*****Section 608.16.5; change to read as follows:***

608.16.5 Connections to lawn irrigation systems.
The potable water supply to lawn irrigation systems shall be protected against backflow by an atmospheric-type vacuum breaker, a pressure-type vacuum breaker, a double-check assembly or a reduced pressure principle backflow preventer. A valve shall not be installed downstream from an atmospheric vacuum breaker. Where chemicals are introduced into the system, the potable water supply shall be protected against backflow by a reduced pressure principle backflow preventer.

(Reason: To recognize regional practices.)

*****Section 608.17; change to read as follows:***

608.17 Protection of individual water supplies. An individual water supply shall be located and constructed so as to be safeguarded against contamination in accordance with applicable local regulations. Installation shall be in accordance with Sections 608.17.1 through 608.17.8.

(Reason: To allow local requirements to govern.)

*****Section 610.1; add exception to read as follows:***

610.1 General. New <u>or repaired</u> potable water systems shall be purged of deleterious matter and disinfected prior to utilization. The method to be followed shall be that prescribed by the health authority or water purveyor having jurisdiction or, in the absence of a prescribed method, the procedure described in either AWWA C651 or AWWA C652, or as described in this section. This requirement shall apply to "on-site" or "in-plant" fabrication of a system or to a modular portion of a system.

1. The pipe system shall be flushed with clean, potable water until dirty water does not appear at the points of outlet.

2. The system or part thereof shall be filled with a water/chlorine solution containing at least 50 parts per million (50 mg/L) of chlorine, and the system or part thereof shall be valved off and allowed to stand for 24 hours; or the system or part thereof shall be filled with a water/chlorine solution containing at least 200 parts per million (200 mg/L) of chlorine and allowed to stand for 3 hours.

3. Following the required standing time, the system shall be flushed with clean potable water until the chlorine is purged from the system.

4. The procedure shall be repeated where shown by a bacteriological examination that contamination remains present in the system.

   <u>Exception:</u> <u>With prior approval the Code Official may wave this requirement when deemed un-necessary. ~~by the Code Official~~.</u>

(Reason: May not always be needed)

Section 703.6; Delete

(Reason: not a standard practice in this region)

******Section 704.5; added to read as follows:***

***704.5* Single stack fittings.** <u>Single stack fittings with internal baffle, PVC schedule 40 or cast iron single stack shall be designed by a registered engineer and comply to a national recognized standard.</u>

(Reason: to allow owners, installers, inspectors, and design professionals to ready identify product markers to determine they meet all required standards.)

******Section 705.11.2; change to read as follows:***

705.11.2 Solvent cementing. Joint surfaces shall be clean and free from moisture. A purple primer that conforms to ASTM F 656 shall be applied. Solvent cement not purple in color and conforming to ASTM D 2564, CSA B137.3, CSA B181.2 or CSA B182.1 shall be applied to all joint surfaces. The joint shall be made while the cement is wet and shall be in accordance with ASTM D 2855. Solvent cement joints shall be permitted above or below ground.

~~Exception: A primer is not required where both of the following conditions apply:~~

1. ~~The solvent cement used is third-party certified as conforming to ASTM D 2564~~
2. ~~The solvent cement is used only for joining PVC drain, waste, and vent pipe and fittings in not pressure applications in sizes up to and including 4 inches (102mm) in diameter.~~

(Reasoning: to keep the "process of joining PVC pipe)

*****Section 712.5; add Section 712.5 to read as follows:***

712.5 Dual Pump System. All sumps shall be automatically discharged and, when in any "public use" occupancy where the sump serves more than 10 fixture units, shall be provided with dual pumps or ejectors arranged to function independently in case of overload or mechanical failure. For storm drainage sumps and pumping systems, see Section 1113.

(Reason: To address dual pump system. To provide reference for storm drainage systems.)

*****Section 714, 714.1; change to read as follows:***

SECTION 714

ENGINEERED ~~COMPUTERIZED~~ DRAINAGE DESIGN

714.1 Design of drainage system. The sizing, design and layout of the drainage system shall be ~~permitted~~ ~~to be~~ designed by a registered engineer using *approved* ~~computer~~ design methods.

(Reason: Code was too restrictive.)

*****Section 804.2; added to read as follows:**

804.2 Special waste pipe, fittings, and components. Pipes, fittings, and components receiving or intended to receive the discharge of any fixture into which acid or corrosive chemicals are placed shall be constructed of CPVC, high silicone iron, PP, PVDF, chemical resistant glass, or glazed ceramic materials.

(Reason): To clarify the allowable materials which are specifically listed for chemical drainage applications.

*****Section 903.1; change to read as follows:***

903.1 Roof extension. Open vent pipes that extend through a roof shall terminate not less than six (6) inches (152 mm) above the roof. Where a roof is to be used for assembly or as a promenade, observation deck, sunbathing deck or similar purposes, open vent pipes shall terminate not less than 7 feet (2134 mm) above the roof.

(Reason: To provide regional guideline on standard installation method for this area and address reference number correction.)

Section 917 Single stack vent system. Delete entire section.

(Reason: Not in conformance with regional practices.)

Section 1002.10; delete.

(Reason: Texas State regulations cover plumbing in mental health centers. Consistent with regional amendment to IPC 405.6.)

Section 1003; see note below:)

{Until the Health and Water Departments of the area can coordinate a uniform grease interceptor section, each city will have to modify this section individually.}

Section 1101.8; change to read as follows:

1101.8 Cleanouts required. Cleanouts or manholes shall be installed in the ~~building~~ storm drainage system and shall comply with the provisions of this code for sanitary drainage pipe cleanouts.

~~**Exception:** Subsurface drainage system~~

(Reason: To specify ~~that~~ where cleanouts are ~~only~~ required. ~~in the building~~.)

Section 1106.1; change to read as follows:

1106.1 General. The size of the vertical conductors and leaders, building storm drains, building storm sewers, and any horizontal branches of such drains or sewers shall be based on six (6) inches per hour ~~the 100-year hourly~~ rainfall rate ~~indicated in Figure 1106.1 or on other rainfall rates determined from *approved* local weather data~~.

(Reason: Specify the roof drain size normally used in the area.)

Section 1108.3; change to read as follows:

1108.3 Sizing of secondary drains. Secondary (emergency) roof drain systems shall be sized in accordance with Section 1106 ~~based on the rainfall rate for which the primary system is sized in Figure 1106.1 or on other rainfall rates determined from *approved* local weather data.~~ Scuppers shall be sized to prevent the depth of ponding water from exceeding that for which the roof was designed as determined by Section 1101.7. Scuppers shall not have an opening dimension of less than 4 inches (102 mm). The flow through the primary system shall not be considered when sizing the secondary roof drain system.

(Reason: Specify that overflow drainage is to be the same size as the normal roof drains.)

Section 1109; delete this section…

Section 1202.1; delete Exception 2.

(Reason: State law already specifies that vacuum systems must comply with NFPA 99C.)

END

Recommended Amendments to the

2015 International Mechanical Code
North Central Texas Council of Governments Region

The following sections, paragraphs, and sentences of the *2015 International Mechanical Code* (IMC) are hereby amended as follows: Standard type is text from the IMC. Underlined type is text inserted. ~~Lined through type is deleted text from the IMC.~~ A double asterisk at the beginning of a section identifies an amendment carried over from the 2012 edition of the code and a triple asterisk identifies a new or revised amendment with the 2015 edition of the code.

Note: Historically the North Central Texas Council of Governments (NCTCOG) has limited Chapter 1 amendments in order to allow each city to insert their local policies and procedures. We now have suggested certain items to be brought to the attention of cities considering adoption of the code that may be of concern to several jurisdictions. **It is still intended to be discretionary to each city to determine which Chapter 1 amendments to include.**

Section 102.8; change to read as follows:

102.8 Referenced Codes and Standards. The codes and standards referenced herein shall be those that are listed in Chapter 15 and such codes, when specifically adopted, and standards shall be considered part of the requirements of this code to the prescribed extent of each such reference. Where differences occur between provisions of this code and the referenced standards, the provisions of this code shall apply. Whenever amendments have been adopted to the referenced codes and standards, each reference to said code and standard shall be considered to reference the adopted amendments. Any reference to NFPA 70 or the *National Electrical Code* (NEC) shall mean the Electrical Code as adopted.

(Reason: Legal wording to recognize locally adopted codes and amendments adopted with referenced codes.)

~~***Section 306.3; change to read as follows:***~~

306.3 Appliances in Attics. Attics containing appliances shall be provided *. . . {bulk of paragraph unchanged} . . .* side of the appliance. The clear *access* opening dimensions shall be a minimum of 20 inches by 30 inches (508 mm by 762 mm), or larger where such dimensions are not large enough to allow removal of the largest appliance. A walkway to an appliance shall be rated as a floor as approved by the building official. As a minimum, for *access* to the attic space, provide one of the following:

4. A permanent stair.

5. A pull down stair with a minimum 300 lb. (136 kg) capacity.

6. An *access* door from an upper floor level.

7. *Access* Panel may be used in lieu of items 1, 2, and 3 with prior approval of the code official due to building conditions.

   Exceptions:

   1. The passageway and level service space are not required where the appliance is capable of being serviced and removed… *{remainder of section unchanged}*

(Reason: To provide a safe means of accessibility to appliances in attics and to allow for different types of construction limitations. Consistent with regional amendment to International Fuel and gas Code (IFGC) 306.3.)

*****Section 306.5; change to read as follows:***

306.5 Equipment and Appliances on Roofs or Elevated Structures. Where *equipment* requiring *access* or appliances are located on an elevated structure or the roof of a building such that personnel will have to climb higher than 16 feet (4877 mm) above grade to access, ~~an~~ a permanent interior or exterior means of access shall be provided. Permanent exterior ladders providing roof *access* need not extend closer than ~~8~~ 12 feet (2438 mm) to the finish grade or floor level below and shall extend to the *equipment* and appliances' level service space. Such *access* shall . . . *{bulk of section to read the same}* . . . on roofs having a slope greater than 4 units vertical in 12 units horizontal (33-percent slope). ... *{bulk of section to read the same}*.

(Reason: To assure safe access to roof appliances and provide a greater level of security for equipment locate more than 16 feet above grade. Consistent with IFGC amendments.)

*****Section 306.5.1; change to read as follows:***

306.5.1 Sloped Roofs. Where appliances, *equipment*, fans or other components that require service are installed on a roof having a slope of 3 units vertical in 12 units horizontal (25-percent slope) or greater and having an edge more than 30 inches (762 mm) above grade at such edge, a catwalk at least 16 inches in width with substantial cleats spaced not more than 16 inches apart shall be provided from the roof *access* to a level platform at the appliance. The level platform shall be provided on each side of the appliance to which *access* is required for service, repair or maintenance. The platform shall be not less than 30 inches (762 mm) in any dimension and shall be provided with guards. The guards shall extend not less than 42 inches (1067 mm) above the platform, shall be constructed so as to prevent the passage of a 21-inch-diameter (533 mm) sphere and shall comply with the loading requirements for guards specified in the *International Building Code*.

(Reason: To assure safe access to roof appliances. Consistent with IFGC amendments.)

*****Section 306; add Section 306.6 to read as follows:***

306.6 Water Heaters Above Ground or Floor. When the mezzanine or platform in which a water heater is installed is more than eight (8) feet (2438 mm) above the ground or floor level, it shall be made accessible by a stairway or permanent ladder fastened to the building.

Exception: A maximum 10 gallon water heater (or larger with approval) is capable of being accessed through a lay-in ceiling and the water heater installed is not more than ten (10) feet (3048 mm) above the ground or floor level and may be reached with a portable ladder.

(Reason: To provide safe access to water heaters and to provide lighting and receptacle for maintenance of equipment. Consistent with regional amendments to IFGC 306.7 and International Plumbing Code (IPC) 502.5.)

*****Section 307.2.3; amend item 2 to read as follows:***

2. A separate overflow drain line shall be connected to the drain pan provided with the equipment. Such overflow drain shall discharge to a conspicuous point of disposal to alert occupants in the event of a stoppage of the primary drain. The overflow drain line shall connect to the drain pan at a higher level than the primary drain connection. However, the conspicuous point shall not create a hazard such as dripping over a walking surface or other areas so as to create a nuisance.

(Reason: Greater specificity in prohibited locations for condensate discharge. Consistent with regional amendment to IPC 314.2.1.)

*****Section 403.2.1; add an item 5 to read as follows:***

5. Toilet rooms within private dwellings that contain only a water closet, lavatory, or combination thereof may be ventilated with an *approved* mechanical recirculating fan or similar device designed to remove odors from the air.

(Reason: Consistent with common regional practice. Consistent with regional amendment to International Residential Code (IRC) R303.3.)

*****Section 501.3; add an exception to read as follows:***

501.3 Exhaust Discharge. The air removed by every mechanical exhaust system shall be discharged outdoors at a point where it will not cause a public nuisance and not less than the distances specified in Section 501.3.1. The air shall be discharged to a location from which it cannot again be readily drawn in by a ventilating system. Air shall not be exhausted into an attic, crawl space, or be directed onto walkways.

Exceptions:

1. Whole-house ventilation-type attic fans shall be permitted to discharge into the attic space of dwelling units having private attics.

2. Commercial cooking recirculating systems.

3. Where installed in accordance with the manufacturer's instructions and where mechanical or natural ventilation is otherwise provided in accordance with Chapter 4, listed and labeled domestic ductless range hoods shall not be required to discharge to the outdoors.

4. Toilet room exhaust ducts may terminate in a warehouse or shop area when infiltration of outside air is present.

(Reason: Provide a reasonable alternative in areas where a large volume of outside air is present.)

*****Section 607.5.1; change to read as follows:***

607.5.1 Fire Walls. Ducts and air transfer openings permitted in fire walls in accordance with Section 705.11 of the International Building Code shall be protected with listed fire dampers installed in accordance with their listing**.** For hazardous exhaust systems see Section 510.1-510.9 IMC.

(Reason: Correspond with un-amended IBC 710.7.)

END

Recommended Amendments to the

2015 International Fuel Gas Code
North Central Texas Council of Governments Region

The following sections, paragraphs, and sentences of the *2015 International Fuel Gas Code* are hereby amended as follows: Standard type is text from the IFGC. Underlined type is text inserted. ~~Lined through type is deleted text from IFGC.~~ A double asterisk at the beginning of a section identifies an amendment carried over from the 2012 edition of the code and a triple asterisk identifies a new or revised amendment with the 2015 code.

*****Section 101.2***
{Local amendments to Section 101.2 may be necessary to correspond with the State Plumbing Licensing Law.}

*****Section 102.2; add an exception to read as follows:***

Exception: Existing dwelling units shall comply with Section 621.2.

(Reason: Previous code provisions made unvented heater provisions retroactive except as provided for in local amendment. This amendment and amendment to IFGC 621.2 better clarify what the code already states: existing systems may stay unless considered unsafe.)

*****Section 102.8; change to read as follows:***

102.8 Referenced codes and standards. The codes and standards referenced in this code shall be those that are listed in Chapter 8 and such codes, when specifically adopted, and standards shall be considered part of the requirements of this code to the prescribed extent of each such reference. Where differences occur between provisions of this code and the referenced standards, the provisions of this code shall apply. Whenever amendments have been adopted to the referenced codes and standards, each reference to said code and standard shall be considered to reference the amendments as well. ~~Any reference to NFPA 70 or the ICC *Electrical Code* shall mean the Electrical Code as adopted.~~

(Reason: Legal wording to recognize locally adopted codes and amendments adopted with referenced codes.)

*****Section 306.3; change to read as follows:***

[M] 306.3 Appliances in attics. Attics containing appliances shall be provided . . . *{bulk of paragraph unchanged}* . . . side of the *appliance*. The clear *access* opening dimensions shall be a minimum of 20 inches by 30 inches (508 mm by 762 mm), ~~and~~ or larger where such dimensions are not large enough to allow removal of the largest *appliance.* A walkway to an appliance shall be rated as a floor as approved by the building official. As a minimum, for *access* to the attic space, provide one of the following:

8. A permanent stair.

9. A pull down stair with a minimum 300 lb (136 kg) capacity.

10. An *access* door from an upper floor level.

11. *Access* Panel may be used in lieu of items 1, 2, and 3 with prior approval of the code official due to building conditions.

Exceptions:

1. The passageway and level service space are not required where the *appliance* is capable of being serviced and removed through the required opening.

2. Where the passageway is not less than … *{bulk of section to read the same}*.

(Reason: To provide a safe means of accessibility to appliances in attics and to allow for different types of construction limitations. Consistent with regional amendment to IMC 306.3.)

*****Section 306.5; change to read as follows:***

[M] 306.5 Equipment and appliances on roofs or elevated structures. Where *equipment* requiring *access* or appliances are located on an elevated structure or the roof of a building such that personnel will have to climb higher than 16 feet (4877 mm) above grade to access, ~~an~~ a permanent interior or exterior means of access shall be provided. Permanent exterior ladders providing roof *access* need not extend closer than ~~8~~ 12 feet (2438 mm) to the finish grade or floor level below and shall extend to the *equipment* and appliances' level service space. Such *access* shall . . . *{bulk of section to read the same}*. . . on roofs having a slope greater than 4 units vertical in 12 units horizontal (33-percent slope). ... *{bulk of section to read the same}*.

(Reason: To assure safe access to roof appliances. Consistent with IMC amendments.)

*****Section 306.5.1; change to read as follows:***

[M] 306.5.1 Sloped roofs. Where appliances, *equipment*, fans or other components that require service are installed on a roof having a slope of 3 units vertical in 12 units horizontal (25-percent slope) or greater and having an edge more than 30 inches (762 mm) above grade at such edge, a catwalk at least 16 inches in width with substantial cleats spaced not more than 16 inches apart shall be provided from the roof *access* to a level platform at the appliance. The level platform shall be provided on each side of the appliance to which *access* is required for service, repair or maintenance. The platform shall be not less than 30 inches (762 mm) in any dimension and shall be provided with guards. The guards shall extend not less than 42 inches (1067 mm) above the platform, shall be constructed so as to prevent the passage of a 21-inch-diameter (533 mm) sphere and shall comply with the loading requirements for guards specified in the *International Building Code*.

(Reason: To assure safe access to roof appliances. Consistent with IMC amendments.)

*****Section 306; add Section 306.7 with exception and subsection 306.7.1 to read as follows:***

306.7 Water heaters above ground or floor. When the attic, roof, mezzanine or platform in which a water heater is installed is more than eight (8) feet (2438 mm) above the ground or floor level, it shall be made accessible by a stairway or permanent ladder fastened to the building.

(Reason: To provide more stringent safe access to water heaters. Consistent with regional amendments to IPC 502.5 and IMC 306.6.)

*****Section 401.5; add a second paragraph to read as follows:***

Both ends of each section of medium pressure gas piping shall identify its operating gas pressure with an *approved* tag. The tags are to be composed of aluminum or stainless steel and the following wording shall be stamped into the tag:

"WARNING
1/2 to 5 psi gas pressure
Do Not Remove"

(Reason: To protect homeowners and plumbers.)

*****Section 402.3; add an exception to read as follows:***

Exception: Corrugated stainless steel tubing (CSST) shall be a minimum of 1/2" (18 EHD).

(Reason: Pipe less than 1/2" has a history in this region of causing whistling.)

Section 404.12; change to read as follows:

404.12 Minimum burial depth. Underground piping systems shall be installed a minimum depth of ~~12~~ 18 inches (~~305~~ 458 mm) top of pipe below grade, ~~except as provided for in Section 404.12.1~~.

(Reason: To provide increased protection to piping systems and address reference number change.)

Section 406.1; change to read as follows:

406.1 General. Prior to acceptance and initial operation, all piping installations shall be inspected and pressure tested to determine that the materials, design, fabrication, and installation practices comply with the requirements of this code. The permit holder shall make the applicable tests prescribed in Sections 406.1.1 through 406.1.5 to determine compliance with the provisions of this code. The permit holder shall give reasonable advance notice to the code official when the piping system is ready for testing. The equipment, material, power and labor necessary for the inspections and test shall be furnished by the permit holder and the permit holder shall be responsible for determining that the work will withstand the test pressure prescribed in the following tests.

(Reason: To utilize language used in the IPC regarding who is responsible for testing procedures.)

Section 406.4; change to read as follows:

406.4 Test pressure measurement. Test pressure shall be measured with a monometer or with a pressure-measuring device designed and calibrated to read, record, or indicate a pressure loss caused by leakage during the pressure test period. The source of pressure shall be isolated before the pressure tests are made. ~~Mechanical gauges used to measure test pressures shall have a range such that the highest end of the scale is not greater than five times the test pressure.~~

(Reason: To require the use of more accurate diaphragm gauges. Spring gauges do not provide accurate measurement below approximately 17 psig.)

Section 406.4.1; change to read as follows:

406.4.1 Test pressure. The test pressure to be used shall be no less than ~~1 1/2 times the proposed maximum working pressure, but no less than 3~~ 3 psig (20 kPa gauge), or at the discretion of the Code Official, the piping and valves may be tested at a pressure of at least six (6) inches (152 mm) of mercury, measured with a manometer or slope gauge. ~~irrespective of design pressure. Where the test pressure exceeds 125 psig (862 kPa gauge), the test pressure shall not exceed a value that produces a hoop stress in the piping greater than 50 percent of the specified minimum yield strength of the pipe.~~ For tests requiring a pressure of 3 psig, diaphragm gauges shall utilize a dial with a minimum diameter of three and one half inches (3 ½”), a set hand, 1/10 pound incrementation and pressure range not to exceed 6 psi for tests requiring a pressure of 3 psig. For tests requiring a pressure of 10 psig, diaphragm gauges shall utilize a dial with a minimum diameter of three and one-half inches (3 ½”), a set hand, a minimum of 2/10 pound incrementation and a pressure range not to exceed 20 psi. For welded piping, and for piping carrying gas at pressures in excess of fourteen (14) inches water column pressure (3.48 kPa) (1/2 psi) and less than 200 inches of water column pressure (52.2 kPa) (7.5 psi), the test pressure shall not be less than ten (10) pounds per square inch (69.6 kPa). For piping carrying gas at a pressure that exceeds 200 inches of water column (52.2 kPa) (7.5 psi), the test pressure shall be not less than one and one-half times the proposed maximum working pressure.

Diaphragm gauges used for testing must display a current calibration and be in good working condition. The appropriate test must be applied to the diaphragm gauge used for testing.

(Reason: To provide for lesser pressures to coordinate with the use of more accurate diaphragm gauges.)

Section 406.4.2; change to read as follows:

406.4.2 Test duration. Test duration shall be held for a length of time satisfactory to the Code Official, but in no case for less than fifteen (15) minutes. For welded piping, and for piping carrying gas at pressures in excess of fourteen (14) inches water column pressure (3.48 kPa), the test duration shall be held for a length of time satisfactory to the Code Official, but in no case for less than thirty (30) minutes. *(Delete remainder of section.)*

(Reason: To comply with accepted regional practices.)

*****Section 409.1; add Section 409.1.4 to read as follows:***

409.1.4 Valves in CSST installations. Shutoff valves installed with corrugated stainless steel (CSST) piping systems shall be supported with an *approved* termination fitting, or equivalent support, suitable for the size of the valves, of adequate strength and quality, and located at intervals so as to prevent or damp out excessive vibration but in no case greater than 12-inches from the center of the valve. Supports shall be installed so as not to interfere with the free expansion and contraction of the system's piping, fittings, and valves between anchors. All valves and supports shall be designed and installed so they will not be disengaged by movement of the supporting piping.

(Reason: To provide proper security to CSST valves. These standards were established in this region in 1999 when CSST was an emerging technology.)

*****Section 410.1; add a second paragraph and exception to read as follows:***

Access to regulators shall comply with the requirements for *access* to appliances as specified in Section 306.

> **Exception:** A passageway or level service space is not required when the regulator is capable of being serviced and removed through the required attic opening.

(Reason: To require adequate access to regulators.)

*****Section 621.2; add exception as follows:***

621.2 Prohibited use. One or more unvented room heaters shall not be used as the sole source of comfort heating in a dwelling unit.

> **Exception:** Existing *approved* unvented heaters may continue to be used in dwelling units, in accordance with the code provisions in effect when installed, when *approved* by the Code Official unless an unsafe condition is determined to exist as described in Section 108.7.

(Reason: Gives code official discretion.)

END

Recommended Amendments to the 2015 International Energy Conservation Code

North Central Texas Council of Governments Region
(Climate Zone 3 of the IECC)

The following sections, paragraphs, and sentences of the *2015 International Energy Conservation Code* (IECC) are hereby amended as follows: Standard type is text from the IECC. Underlined type is text inserted. ~~Lined through type is deleted text from IECC.~~ A double (**) asterisk at the beginning of a section identifies an amendment carried over from the 2012 edition of the code and a triple (***) asterisk identifies a new or revised amendment with the 2015 code.

Note: Historically NCTCOG has limited Chapter 1 amendments in order to allow each city to insert their local policies and procedures. We now have suggested certain items to be brought to the attention of cities considering adoption of the code that may be of concern to several jurisdictions. **It is still intended to be discretionary to each city to determine which Chapter 1 amendments to include.**

The 2015 IECC contains separate provisions for commercial buildings and for residential buildings 3 stories or less. The provisions of the commercial buildings are preceded by "C" for Commercial. The provisions for residential buildings 3 stories or less are preceded by "R" for residential buildings. Each set of provisions are separately applied to buildings within their respective scope. Each set of provisions also contains a Scope and Administration chapter, a Definitions chapter, a General Requirements chapter and a chapter containing energy efficiency requirements applicable to building within their respective scope.

Recommended amendments that match sections in each of the respective provisions ("C" and "R") are written to represent both sections rather than duplicating the recommended amendment in this document.

Sections N1101.2 through N1105 of the 2015 *International Residential Code (*IRC) are noted to be extracted from the 2015 IECC. The Building and Residential Advisory Board (BRAB) recommends amending Chapter 11 [RE] ENERGY EFFICIENCY of the 2015 IRC to refer to the residential provisions of the 2015 IECC.

The Governor signed HB1736 into law on June 16, 2015. HB1736 adopts energy efficiency chapter of the International Residential Code as it existing on May 1, 2015, as the energy code for single-family construction (as defined in Section 388.002 of the Health and Safety Code) effective September 1, 2016. The recommended amendments to the 2015 IECC have been analyzed by the Energy Systems Laboratory of the Texas A&M University for stringency with the current Texas Building Energy Performance Standards (TBEPS) which is the 2009 Edition of the IECC and the energy provisions of the 2009 IRC. Some amendments below are noted that effective September 1, 2016, the proposed amendment would be deemed less stringent than the provisions of the 2015 IECC and therefore would no longer be considered a recommended amendment.

*****Section C102/R102; add Section C102.1.2 and R102.1.2 to read as follows:***

C102.1.2 Alternative compliance. A building certified by a national, state, or local accredited energy efficiency program and determined by the Energy Systems Laboratory to be in compliance with the energy efficiency requirements of this section may, at the option of the Code Official, be considered in compliance. The United States Environmental Protection Agency's Energy Star Program certification of energy code equivalency shall be considered in compliance.

R102.1.2 Alternative compliance. A building certified by a national, state, or local accredited energy efficiency program and determined by the Energy Systems Laboratory to be in compliance with the energy efficiency requirements of this section may, at the option of the Code Official, be considered in compliance. The United States Environmental Protection Agency's Energy Star Program certification of energy code equivalency shall be considered in compliance. Regardless of the program or the path to compliance, each 1- and 2-family dwelling shall be tested for air and duct leakage as prescribed in Section R402.4 and R403.3.3 respectively.

(Reason: This amendment is added to allow alternative compliance in accordance with Texas HB 1365, 78th Legislature. Codified in Chapter 388 Texas Building Energy Performance Standards: §388.003(i).
The last sentence to Section R102.1.2 was added to insure that every house is tested in accordance with the mandatory provisions of the code.)

Section C202 and R202; ***add the following definition:***

*****PROJECTION FACTOR.** The ratio of the horizontal depth of the overhang, eave or permanently attached shading device, divided by the distance measured vertically from the bottom of the fenestration glazing to the underside of the overhang, eave or permanently attached shading device.

*(Reason: The amendment to **Section 402.3.2 Glazed fenestration SHGC** was proposed by the TAB and ESL determined the proposal to be not less restrictive than the 2009, 2012 and 2015 IECC. This added definition is necessary as part of that amendment. The amendment will provide additional options for SHGC selection.)*

Section R202; *add the following definition:*

*****DYNAMIC GLAZING.** Any fenestration product that has the fully reversible ability to change it performance properties, including *U*-factor, solar heat gain coefficient (SHGC), or visible transmittance (VT).

(Reason: This term is referenced in Section R402.3.2. This definition of DYMANIC GLAZING is also found in the Commercial provisions of the code.)

***** Table R402.1.2 INSULATION AND FENESTRATION REQUIREMENTS BY COMPONENT; Amend by changing the WOOD FRAME WALL R-VALUE for CLIMATE ZONE 3 to read as follows:***

~~20 or 13+5~~[h] 13

(Reason: Retain the values in the 2009 code.)

NOTE: Effective September 1, 2016 this proposed amendment is deemed less stringent than the residential provisions of the 2015 IECC and therefore would not be considered a recommended amendment.

***** Table R402.1.4 EQUIVALENT U-FACTORS; Amend by changing the WOOD FRAME WALL U-FACTOR for CLIMATE ZONE 3 to read as follows:***

~~0.060~~ 0.082

(Reason: Retain the values in the 2009 code.)

NOTE: Effective September 1, 2016 this proposed amendment is deemed less stringent than the residential provisions of the 2015 IECC and therefore would not be considered a recommended amendment.

******Section R402.3.2 Glazed fenestration SHGC; amend by adding a paragraph and table following the exception to read as follows:***

Where vertical fenestration is shaded by an overhang, eave, or permanently attached shading device, the SHGC required in Table R402.1.2 shall be reduced by using the multipliers in Table R402.3.2 SHGC Multipliers for Permanent Projections.

Table R402.3.2 SHGC Multipliers for Permanent Projections [a]

Projection Factor	SHGC Multiplier (all Other Orientation)	SHGC Multiplier (North Oriented)
0 - 0.10	1.00	1.00
>0.10 – 0.20	0.91	0.95
>0.20 – 0.30	0.82	0.91
>0.30 – 0.40	0.74	0.87
>0.40 – 0.50	0.67	0.84

>0.50 – 0.60	0.61	0.81
>0.60 – 0.70	0.56	0.78
>0.70 – 0.80	0.51	0.76
>0.80 – 0.90	0.47	0.75
>0.90 – 1.00	0.44	0.73

[a] North oriented means within 45 degrees of true north.

*(Reason: The amendment to **Section 402.3.2 Glazed fenestration SHGC** was proposed by the TAB and ESL determined the proposal to be not less restrictive than the 2009 and 2015 IECC. This added definition is necessary as part of that amendment. The amendment will provide additional options for SHGC selection.)*

*****Section R402.4.1.2 Testing; modify the first paragraph to read as follows:***

R402.4.1.2 Testing. The building or dwelling unit shall be tested and verified as having an air leakage rate of not exceeding 5 air changes per hour in ~~Climate Zones 1 and 2, and 3 air changes per hour in~~ Climate Zone~~s~~ 3 ~~through 8~~. *{Remainder of text unchanged}*

(Reason: The 2015 IECC requires mandatory door blower testing on each dwelling unit. The visual inspection is no longer an option to performance testing. This change will give some additional time for those builders not currently using a performance approach to adapt construction practices.)

NOTE: Effective September 1, 2016 this proposed amendment is deemed less stringent than the residential provisions of the 2015 IECC and therefore would not be considered a recommended amendment.

******R402.4.1.2 Testing; Add a last paragraph to read as follows:***

Mandatory testing shall only be performed by individuals that are certified to perform air infiltration testing certified by national or state organizations as approved by the building official. The certified individuals must be an independent third-party entity, and may not be employed; or have any financial interest in the company that constructs the structure.

(Reason: The 2012/15 International Residential Code (IRC) and International Energy Conservation Code (IECC) includes enhanced emphasis on envelope infiltration and duct leakage. Significant changes in the residential energy requirements include more frequent requirement of performance testing for leakage. Residential Duct systems must be tested unless all ducts and equipment are located within the conditioned space. Envelope testing is required to demonstrate compliance with maximum allowable leakage rate. This language puts the regulatory authority on notice that the testing requires specialized credentials and establishes a conflict of interest baseline).

****** R403.3.3 Duct Testing (Mandatory)Add a last paragraph to read as follows:***

Mandatory testing shall only be performed by individuals that are certified to perform duct testing leakage testing certified by national or state organizations as approved by the building official. The certified individuals must be an independent third-party entity, and may not be employed; or have any financial interest in the company that constructs the structure.

(Reason: The 2015 International Residential Code (IRC) and International Energy Conservation Code (IECC) includes enhanced emphasis on envelope infiltration and duct leakage. Significant changes in the residential energy requirements include more frequent requirement of performance testing for leakage. Residential Duct systems must be tested unless all ducts and equipment are located within the conditioned space. Envelope testing is required to demonstrate compliance with maximum allowable leakage rate. This language puts the regulatory authority on notice that the testing requires specialized credentials and establishes a conflict of interest baseline).

Section C402.2.7/R402.2; Add Section C402.2.9 and R402.2.14 to read as follows:

Section C402.2.7/R402.2.14 Insulation installed in walls. To insure that insulation remains in place, insulation installed in walls shall be totally enclosed on all sides consisting of framing lumber, gypsum, sheathing, wood structural panel sheathing, netting or other equivalent material approved by the building official.

(Reason: This will increase the performance of the insulation by ensuring that the insulation stays in place.)

******Section R405.6.2; add the following sentence to the end of paragraph:***

Acceptable performance software simulation tools may include, but are not limited to, REM Rate™, Energy Gauge and IC3. Other performance software programs accredited by RESNET BESTEST and having the ability to provide a report as outlined in R405.4.2 may also be deemed acceptable performance simulation programs and may be considered by the building official.

(Reason: These performance software tools are accredited by RESNET at the time of recommendation.)

******TABLE R406.4 MAXIMUM ENERGY RATING INDEX;* amend to read as follows**:

TABLE R406.4[1]
MAXIMUM ENERGY RATING INDEX

CLIMATE ZONE	ENERGY RATING INDEX
3	65

[1] This table is effective until August 31, 2019.

TABLE R406.4[2]
MAXIMUM ENERGY RATING INDEX

CLIMATE ZONE	ENERGY RATING INDEX
3	63

[2] The table is effective from September 1, 2019 to August 31, 2022.

TABLE R406.4[3]
MAXIMUM ENERGY RATING INDEX

CLIMATE ZONE	ENERGY RATING INDEX
3	59

[3] This table is effective on or after September 1, 2022.

(Reason: The tables reflect the values and time table set forth in HB1736.)

END

Recommended Amendments to the

2014 National Electrical Code

North Central Texas Council of Governments

The following articles, paragraphs, and sentences of the *2014 National Electrical Code (NEC)* are hereby amended as follows: Standard type is text from the NEC. Highlighted with gray shading is text inserted. ~~Lined through type is deleted text from NEC.~~ A double asterisk (**) at the beginning of an article identifies an amendment carried over from the 2011 edition of the code and a triple asterisk (***) identifies a new or revised amendment with the 2014 code.

******Article 100; add the following to definitions:***

Engineering Supervision. Supervision by a Qualified State of Texas Licensed Professional Engineer engaged primarily in the design or maintenance of electrical installations.

(REASON FOR CHANGE: To better define the qualifications for engineering supervision. This term is used twenty four times in the National Electrical Code.)

******Article 100; amend the following definition:***

Intersystem Bonding Termination. A device that provides a means for connecting intersystem bonding conductors for communication systems and other systems ~~such as metallic gas piping systems~~ to the grounding electrode system. Bonding conductors for other systems shall not be larger than 6 AWG.

(REASON FOR CHANGE: To allow for a termination point for other bonding conductors in addition to communication systems that are required by the various model codes.6 AWG was chosen to coincide with the minimum size of bonding conductor required to the intersystem bonding jumper.)

******Article 110.2; change the following to read as follows:***

110.2 Approval. The conductors and equipment required or permitted by this *Code* shall be acceptable only if approved. Approval of equipment may be evident by listing and labeling of equipment by a Nationally Recognized Testing Lab (NRTL) with a certification mark of that laboratory or a qualified third party inspection agency approved by the AHJ.

Exception: Unlisted equipment that is relocated to another location within a jurisdiction or is field modified is subject to the approval by the AHJ. This approval may be by a field evaluation by a NRTL or qualified third party inspection agency approved by the AHJ.

~~Manufacturer's self-certification of any equipment shall not be used as a basis for approval by the AHJ.~~

Informational Note No. 1: See 90.7, Examination of Equipment for Safety, and 110.3, Examination, Identification, Installation, and Use of Equipment. See definitions of *Approved*, *Identified*, *Labeled*, and *Listed*.

Informational Note No. 2: Manufacturer's self-certification of equipment may not necessarily comply with US product safety standards as certified by a Nationally Recognized Testing Lab.

Informational Note No. 3: NFPA 790 and 791 provide an example of an approved method for qualifying a third party inspection agency.

(REASON FOR CHANGE: To add clarity and provide more positive options for enforcement and approval of unlisted equipment.)

******Article 210.52(G) (1) Garages:* delete the following**

(1) Garages. In each attached garage and in each detached garage with electric power. ~~The branch circuit supplying this receptacle(s) shall not supply outlets outside of the garage.~~ At least one receptacle outlet shall be installed for each car space.

(*REASON FOR CHANGE: Installations in compliance with this Code are not necessarily efficient, convenient, or adequate for good service or future expansion of electrical use.)*

****Article 230.71(A); add the following exception:**

Exception: Multi-occupant buildings. Individual service disconnecting means is limited to six for each occupant. The number of individual disconnects at one location may exceed six.

(REASON FOR CHANGE: This is currently the accepted installation practice of the region. No noteworthy complaints have surfaced. It is more reasonable than the current NEC requirements. It allows more than six disconnects grouped at one location. This also allows designers more flexibility in the placement of electrical meters and main service disconnects.)

******Article 240.91; delete the Article.***

(REASON FOR CHANGE: Present day equipment is not listed and has not been evaluated for the use. Removing this article may prevent both installers and AHJ's from misapplying the Code.

****Article 300.11; add the following exception:**
Exception: Ceiling grid support wires may be used for structural supports when the associated wiring is located in that area, not more than two raceways or cables supported per wire, with a maximum nominal metric designation 16 (trade size 1/2").

(REASON FOR CHANGE: To provide limited support of raceways and cables by ceiling grid support wire.)

*****Article 310.15(B) (7); change to read as follows:***

(7) This Article shall not be used in conjunction with 220.82.

(REASON FOR CHANGE: 310.15(B) (7) has been revised and the table has been deleted.)

******Article 500.8 (A) (3) changed to read as follows:***

500.8 Equipment.
Articles 500 through 504 require equipment construction and installation that ensure safe performance under conditions of proper use and maintenance.

Informational Note No. 1: It is important that inspection authorities and users exercise more than ordinary care with regard to installation and maintenance.

Informational Note No. 2: Since there is no consistent relationship between explosion properties and ignition temperature, the two are independent requirements.

Informational Note No. 3: Low ambient conditions require special consideration. Explosionproof or dust-ignitionproof equipment may not be suitable for use at temperatures lower than -25°C (-13°F) unless they are identified for low-temperature service. However, at low ambient temperatures, flammable concentrations of vapors may not exist in a location classified as Class I, Division 1 at normal ambient temperature.

(A) Suitability. Suitability of identified equipment shall be determined by one of the following:

(1) Equipment listing or labeling
(2) Evidence of equipment evaluation from a qualified testing laboratory or inspection agency concerned with product evaluation
(3) Evidence acceptable to the authority having jurisdiction such as a manufacturer's self-evaluation or ~~an owner's engineering judgment.~~ an engineering judgment signed and sealed by a qualified ~~Registered~~ licensed Professional Engineer in the State of Texas.

Informational Note: Additional documentation for equipment may include certificates demonstrating compliance with applicable equipment standards, indicating special conditions of use, and other pertinent information.

(REASON FOR CHANGE: Carry over from previous amendment with change to better define the qualifications for an engineering judgment.)

******Article 505.7 (A) changed to read as follows:***

505.7 Special Precaution.
Article 505 requires equipment construction and installation that ensures safe performance under conditions of proper use and maintenance.

Informational Note No. 1: It is important that inspection authorities and users exercise more than ordinary care with regard to the installation and maintenance of electrical equipment in hazardous (classified) locations.

Informational Note No. 2: Low ambient conditions require special consideration. Electrical equipment depending on the protection techniques described by 505.8(A) may not be suitable for use at temperatures lower than -20°C (-4°F) unless they are identified for use at lower temperatures. However, at low ambient temperatures, flammable concentrations of vapors may not exist in a location classified Class I, Zones 0, 1, or 2 at normal ambient temperature.

(A) Implementation of Zone Classification System. Classification of areas, engineering and design, selection of equipment and wiring methods, installation, and inspection shall be performed by a qualified ~~persons~~ ~~Registered~~ licensed Professional Engineer in the State of Texas.

(REASON FOR CHANGE: Carry over from previous amendment with change to better define the qualifications for an engineering judgment.)

*****Article 517.30 Essential Electrical Systems for Hospitals; create a new (H) and add the following language:**

(G) Coordination. Overcurrent protective devices serving the equipment branch of the essential electrical system shall be coordinated for the period of time that a fault's duration extends beyond 0.1 second.

Exception No. 1: Between transformer primary and secondary overcurrent protective devices, where only one overcurrent protective device or set of overcurrent protective devices exists on the transformer secondary.

Exception No. 2: Between overcurrent protective devices of the same size (ampere rating) in series.

Informational Note: The terms coordination and coordinated as used in this section do not cover the full range of overcurrent conditions.

(H) Selective Coordination. Overcurrent protective devices serving the life safety, and critical branches of the essential electrical system shall be selectively coordinated with all supply-side overcurrent protective devices.

Exception No. 1: Between transformer primary and secondary overcurrent protective devices, where only one overcurrent protective device or set of overcurrent protective devices exists on the transformer secondary.

Exception No. 2: Between overcurrent protective devices of the same size (ampere rating) in series.

Informational Note: The terms coordination and coordinated as used in this section do not cover the full range of overcurrent conditions.

(REASON FOR CHANGE: Changes made by deleting the definition of emergency systems in Article 517 Health Care Facilities and removing emergency systems as "Essential Electrical Systems for Hospitals in 517.30(B) (2), plus the new addition of section 517.30(G) for "Coordination" instead of using selective coordination, has diminished the reliability of the "Life Safety and Critical Branches of the Essential Electrical System" to deliver power to vital loads. By providing only "coordination," the instantaneous portion of the time-current curve has been eliminated from the overcurrent device settings.)

*****Article 680.25(A) changed to read as follows:**

680.25 Feeders.
These provisions shall apply to any feeder on the supply side of panelboards supplying branch circuits for pool equipment covered in Part II of this article and on the load side of the service equipment or the source of a separately derived system.

(A) Wiring Methods.

(1) Feeders. Feeders shall be installed in rigid metal conduit, intermediate metal conduit. The following wiring methods shall be permitted if not subject to physical damage:

(1) Liquidtight flexible nonmetallic conduit
(2) Rigid polyvinyl chloride conduit
(3) Reinforced thermosetting resin conduit
(4) Electrical metallic tubing where installed on or in a building
(5) Electrical nonmetallic tubing where installed within a building
(6) Type MC Cable where installed within a building and if not subject to corrosive environment
(7) Nonmetallic-sheathed cable
(8) Type SE cable

~~Exception: A feeder within a one-family dwelling or two-family dwelling unit between remote panelboard and service equipment shall be permitted to run in flexible metal conduit or an approved cable assembly that includes an insulated equipment grounding conductor within its outer sheath. The equipment grounding conductor shall comply with 250.24(A) (5).~~

(REASON FOR CHANGE: Carry over from previous amendments. Text changed to reflect 2014 National Electrical Code. Exception deleted per Errata No.70-14-2)

END